REALISTIC®

Service Manual

20-165

PRO-16

VHF LOW-HIGH/UHF 16-CHANNEL SCANNING MONITOR RECEIVER

Catalog Number: 20-165

CUSTOM MANUFACTURED FOR RADIO SHACK TC A TANDY CORPORATION COMPANY

Radio Shack®

NO. 1033

Service Information Bulletin

Catalog No.: 20-165

Description: PRO-16A 3-Band Scanner

SUBJECT: PRO-16A — Extended UHF Coverage Model of PRO-16

The purpose of this Service Information Bulletin is to up-date the PRO-16 Service Manual to include changes incorporated in the PRO-16A (extended UHF coverage).

For UHF, the PRO-16 covers a frequency range of 450-470. The PRO-16A provides extended coverage to 512 MHz. With the exception of the UHF front-end, the PRO-16A is identical to the PRO-16.

UHF BAND SPECIFICATIONS (Changes from PRO-16)

Description	Nominal Spec.	Limit Spec.
Frequency Coverage	480 ± 15 MHz	450-512 MHz
Sensitivity 480 ± 15 MHz 480 ± 30 MHz	 1 μV for 20 dB quieting 3 μV for 20 dB quieting	 2 μV for 20 dB quieting 8 μV for 20 dB quieting
Image Ratio	20 dB at 480 MHz	better than 8 dB at 480 MHz

UHF FRONT-END ALIGNMENT

NOTE: As supplied by the Factory, the UHF section (front-end) of the PRO-16A is set up to provide maximum sensitivity in the range of 465 to 495 MHz. If a customer desires optimum performance for a frequency range other than this, you can re-align the UHF front end for maximum sensitivity at a center frequency anywhere from about 450 to 512 MHz. To achieve optimum sensitivity, re-align the RF and Local Oscillator for the desired center frequency. Keep in mind that best sensitivity will cover only a bandwidth "window" of about 30 MHz total — adjust the sensitivity accordingly (compromise of frequency coverage may be necessary). **Of course, be sure to use correct crystals.**

Step 1: Connect the instruments as shown in Figure 1.

Step 2: Set at least one crystal band selector switch to "U" position.

Step 3: Adjust TC-2 to minimum capacitance.

Step 4: Adjust TC-1 for maximum output and best curve symmetry as shown in Figure 2.

UHF FRONT-END ALIGNMENT

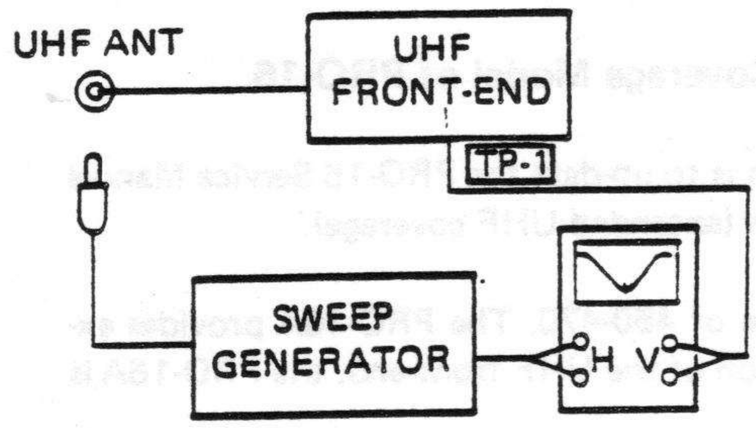

Figure 1

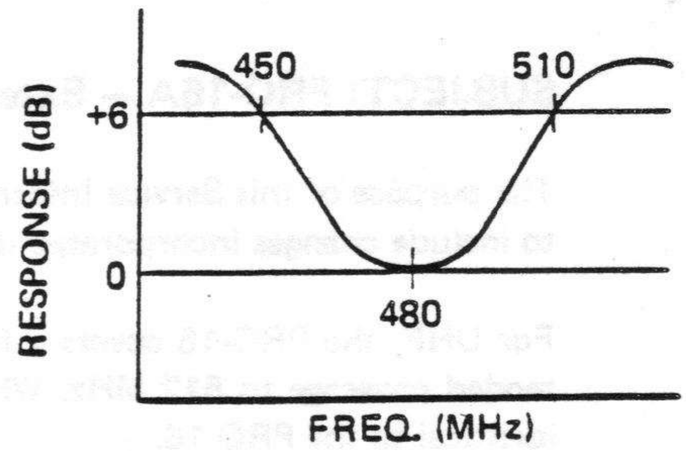

Figure 2

UHF FRONT END ALIGNMENT POSITION

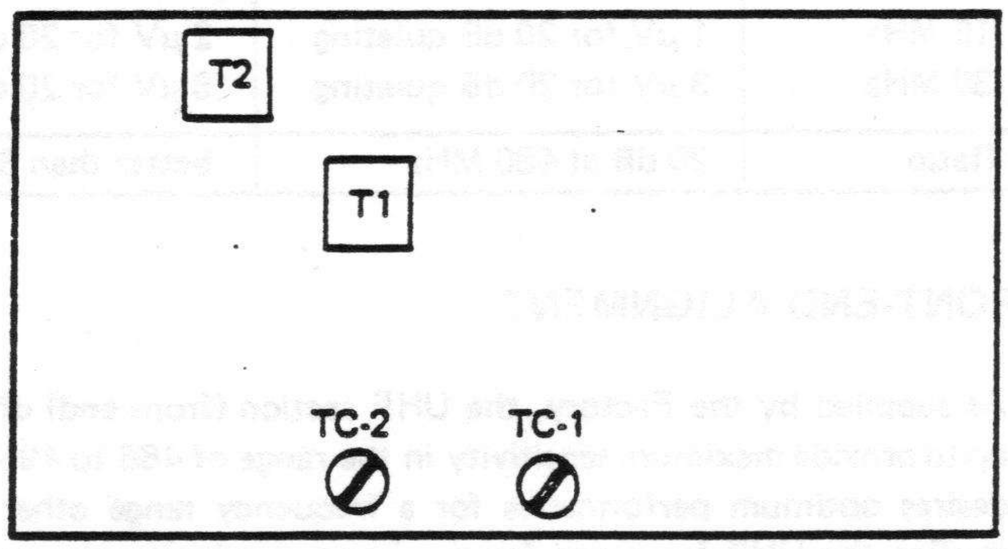

UHF OVERALL ALIGNMENT AND SENSITIVITY MEASUREMENT

Step 1: Connect signal generator to UHF ANT input and AC VTVM to Speaker terminals.

Step 2: Turn SQUELCH max counterclockwise and set frequency to receive band center (480 MHz).

Step 3: Adjust TC-2, T-1 and T-2 on the UHF Front-end and T-4 on the Oscillator PCB for maximum sensitivity.

Step 4: Adjust the output of the Generator to minimum, and with no modulation; set VOLUME for 0 dB reading on the AC VTVM.

Step 5: Increase Generator output to obtain reading of -20 dB on the VTVM. The Generator output now equals the 20 dB noise quieting sensitivity of the Receiver.

20-165 PRO-16A FRONT END P.C.B. TOP VIEW

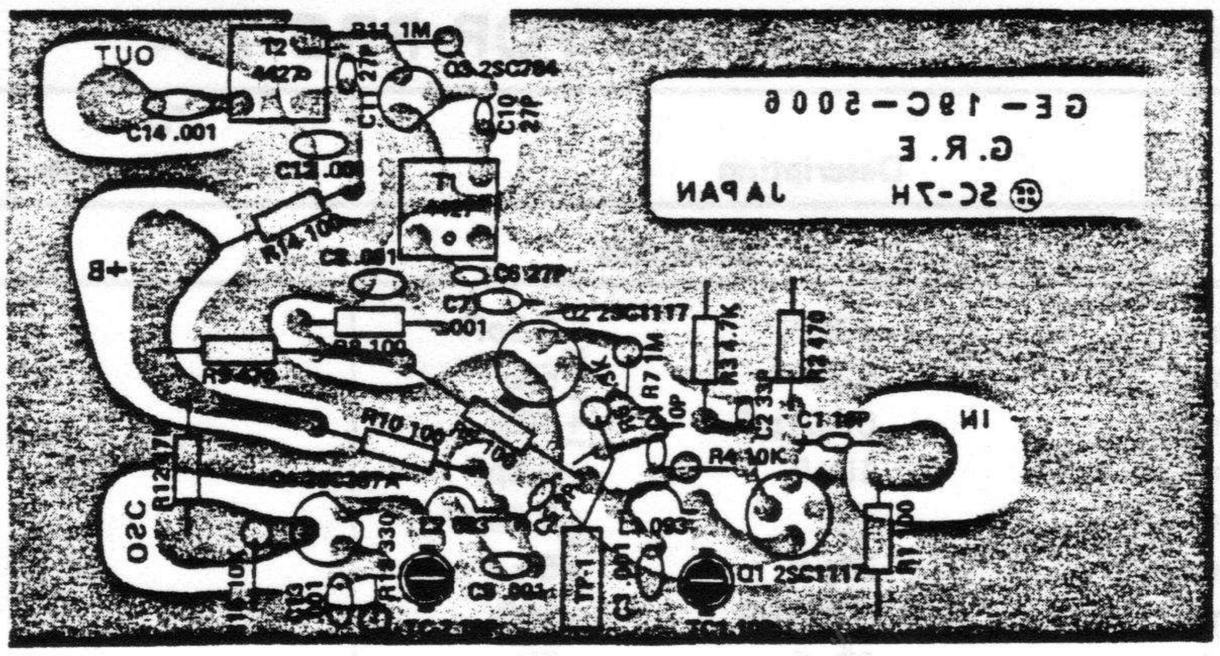

20-165 PRO-16A FRONT END P.C.B. BOTTOM VIEW

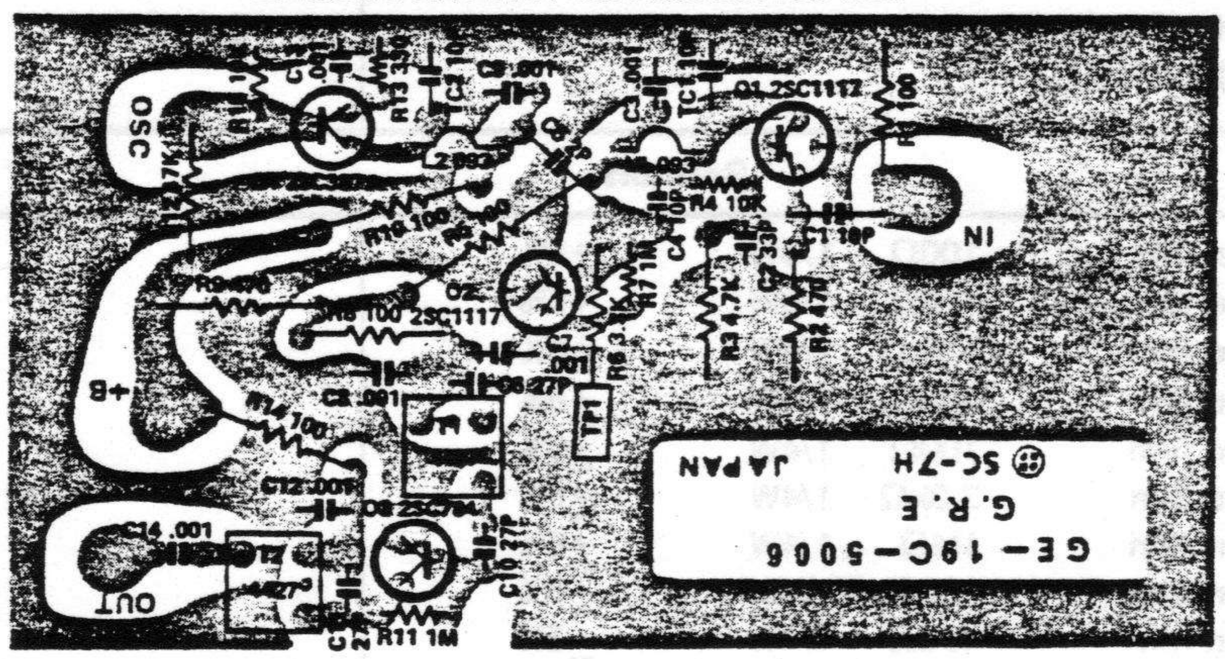

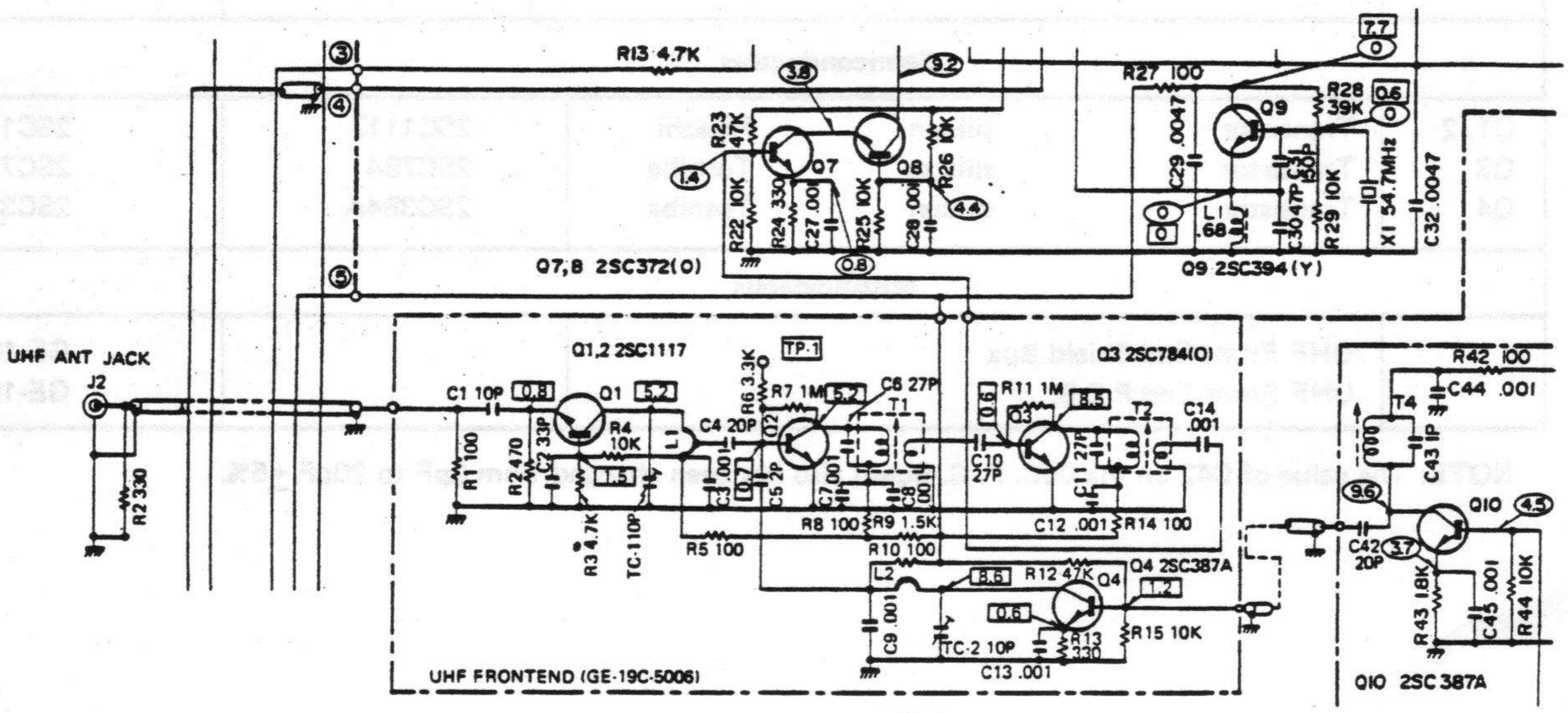

UHF FRONT-END SCHEMATIC DIAGRAM (PRO-16A)

UHF FRONT-END PARTS LIST FOR PRO-16A

Ref. No.	Description				RS Part Number	MER's Part Number
	Capacitors					
C1	Ceramic	10pF		±0.5pF		FC-50
C2	Ceramic	33pF		±5%		FC-50
C3	Ceramic	0.001μF		±10%		SCP-60
C4	Ceramic	10pF		±0.5pF		FC-50
C5	Ceramic	2pF		±0.25pF		FC-50
C6	Ceramic	27pF		±5%		FC-50
C7-9	Ceramic	0.001μF		±10%		SCP-60
C10, 11	Ceramic	27pF		±5%		FC-50
C12-14	Ceramic	0.001μF		±10%		SCP-60
TC1, 2	PC Trimmer					ECV—1ZW10P51
	Coil					
T1, 2	44 MHz IFT				CA-4549	113KN-4427
L1, 2	UHF Tank Coil					8LNR-093
	Resistors					
R1	Carbon film	100Ω	1/4W	±5%		ERD-18TJ101
R2	Carbon film	470Ω	1/4W	±5%		ERD-18TJ471
R3	Carbon film	4.7kΩ	1/4W	±5%		ERD-18TJ472
R4	Carbon film	10kΩ	1/4W	±5%		ERD-18VJ103
R5	Carbon film	100Ω	1/4W	±5%		ERD-18TJ101
R6	Carbon film	3.3kΩ	1/4W	±5%		ERD-18TJ332
R7	Carbon film	1MΩ	1/4W	±5%		ERD-18VJ104
R8	Carbon film	100Ω	1/4W	±5%		ERD-18TJ101
R9	Carbon film	470Ω	1/4W	±5%		ERD-18TJ471
R10	Carbon film	100Ω	1/4W	±5%		ERD-18TJ101
R11	Carbon film	1MΩ	1/4W	±5%		ERD-18VJ104
R12	Carbon film	47kΩ	1/4W	±5%		ERD-18TJ473
R13	Carbon film	330Ω	1/4W	±5%		ERD-18VJ331
R14	Carbon film	100Ω	1/4W	±5%		ERD-18TJ101
R15	Carbon film	10kΩ	1/4W	±5%		ERD-18VJ103
	Semiconductors					
Q1, 2	Transistor	silicon		Hitachi	2SC1117	2SC1117
Q3	Transistor	silicon		Toshiba	2SC784	2SC784
Q4	Transistor	silicon		Toshiba	2SC384A	2SC384A
	Miscellaneous					
	UHF Front-End Shield Box					GE-18C-4257
	UHF Front-End P.C.B.					GE-19C-5006

NOTE: The value of C42 on the OSC. P. C. Board also has been changed from 2pF to 20pF ±5%.

RADIO SHACK A TANDY CORPORATION COMPANY
U.S.A.: FORT WORTH, TEXAS 76107
CANADA: BARRIE, ONTARIO, CANADA L4M 4W5

CONTENTS

SPECIFICATIONS

Description	Nominal spec.	Limit spec.
Frequency coverage (VHF Lo) (VHF Hi) (UHF)	40 ± 3 MHz 153 ± 4 MHz 460 ± 5 MHz	40 ± 6 MHz (30–50 Max coverage) 153 ± 8 MHz (148–174 Max coverage) 460 ± 10 MHz (450–470)
Scanning rate (Variable speed)		Approx. 10 – 20 channel/sec.
Scan delay time	2 sec.	1.5 – 3 sec.
Sensitivity (VHF 40 ± 3 MHz) (VHF 153 ± 4 MHz) (UHF 460 ± 5 MHz) (UHF 460 ± 10 MHz)	1 μV for 20 dB quieting 1 μV for 20 dB quieting 1 μV for 20 dB quieting 2 μV for 20 dB quieting	2 μV for 20 dB quieting 2 μV for 20 dB quieting 2 μV for 20 dB quieting 4 μV for 20 dB quieting
Selectivity –6 dB –50 dB	± 13.5 kHz ± 20 kHz	≧ ± 12.5 kHz ≦ ± 25 kHz
Spurious rejection	VHF Lo 50 dB VHF Hi 50 dB UHF 25 dB	VHF Lo more than 40 dB VHF Hi more than 40 dB UHF More than 20 dB at 460 MHz
1st IF rejection (44 MHz)		More than 50 dB
Image ratio (VHF Lo) (VHF Hi) (UHF)	40 dB at 37 MHz 50 dB at 40 and 43 MHz 40 dB at 149 and 153 MHz 25 dB at 157 MHz 30 dB at 450, 460 and 470 MHz	More than 35 dB More than 20 dB More than 25 dB
Modulation acceptance		± 7 kHz
AFC action (UHF)		More than ± 4 kHz
Squelch sensitivity (Threshold)		Less than 1 μV
Audio power output	2 watts Max.	More than 1.5 watts
Priority cycle rate	1.0 sec.	0.8 – 1.5 sec.
Priority sampling rate	40 m. sec.	30 – 60 m. sec.

Frequency range (VHF LO, HI & UHF)	:	30 – 50 MHz, 148 – 174 MHz and 450 – 485 MHz
Program channel	:	16 channels
Type of crystal	:	HC-25/u (HC-18/u wired-in type)
Built-in speaker	:	2-1/2" x 4" oval type, 8 ohms
Power and power consumption	:	120 V AC 60Hz, 12 watts Max. 12 V DC Negative ground, 9 watts Max.
Dimensions	:	Approx. 9-1/2"(W) x 10-1/4"(D) x 3-1/4"(H)

DISASSEMBLY DIAGRAM

Refer to Figure 1.

Step 1: Remove both mounting bracket screws and remove the bracket.

Step 2: Remove crystal cover screws and remove the crystal cover.

Step 3: Remove chassis mounting screws from the rear.

Step 4: Push out the chassis from the rear.

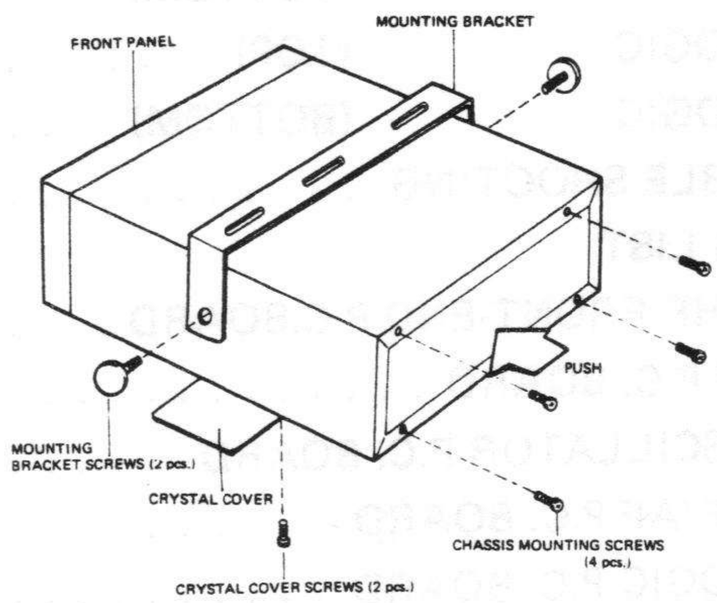

FIGURE 1. CHASSIS DISASSEMBLY

CRYSTAL INSTALLATION

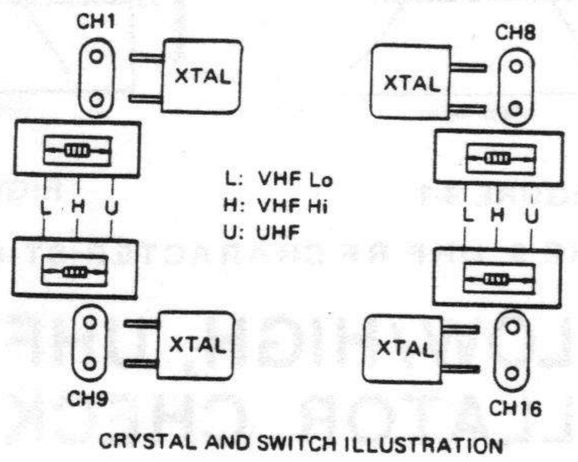

FIGURE 2. CRYSTAL INSTALLATION

ALIGNMENT PREPARATION

Test equipment required

1. Oscilloscope
2. Slow sweep generator with variable marker (10.7 MHz)
3. VHF sweep generator with variable marker (30 – 50 MHz, 148 – 174 MHz)
4. UHF sweep generator with variable marker (450 – 490 MHz)
5. RF frequency counter
6. AC V.T.V.M.
7. DC V.T.V.M.
8. 8 ohm dummy load

Note: Use a non-metallic tool.
The test equipment and receiver should be warmed up at least 10 minutes before proceeding with alignment.
Input signal from the generator should be kept as low as possible and still obtain usable output.

IF SECTION ALIGNMENT

Step 1: Connect the instruments as shown in Figure 3.

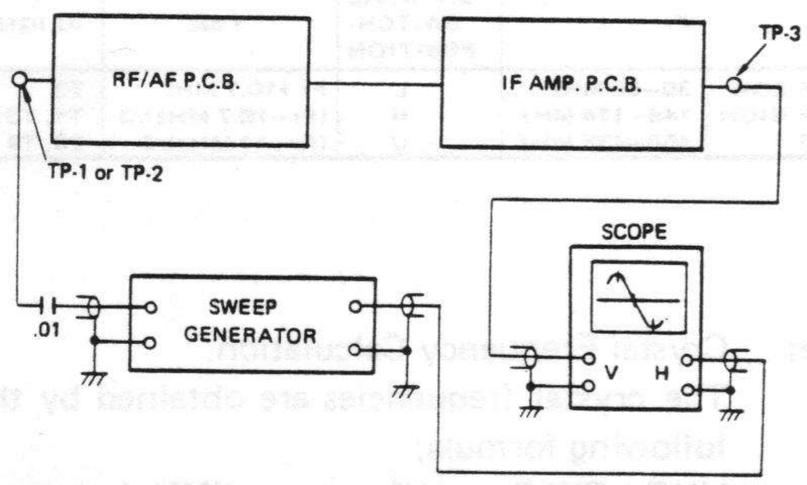

FIGURE 3. IF SECTION ALIGNMENT TEST EQPT. HOOK UP

Step 2: Maintain sweep generator output at a low level to prevent overloading.

Step 3: Adjust T1, T2 of IF amplifier section so that the 455 kHz marker is in the center of the discriminator curve and further adjust T8 of RF/AF section for best linearity.

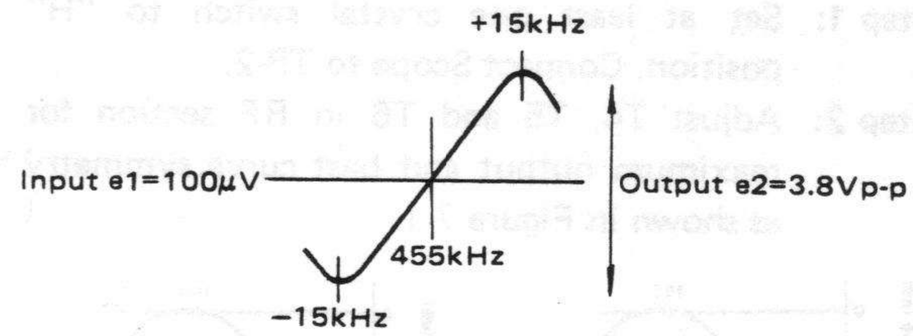

FIGURE 4. IF DISCRIMINATOR CURVE

Note: Input signal level from the sweep generator should be kept as low as possible.

VHF LOW/HIGH BAND RF ALIGNMENT

Step 1: Connect the instruments as shown in Figure 5.

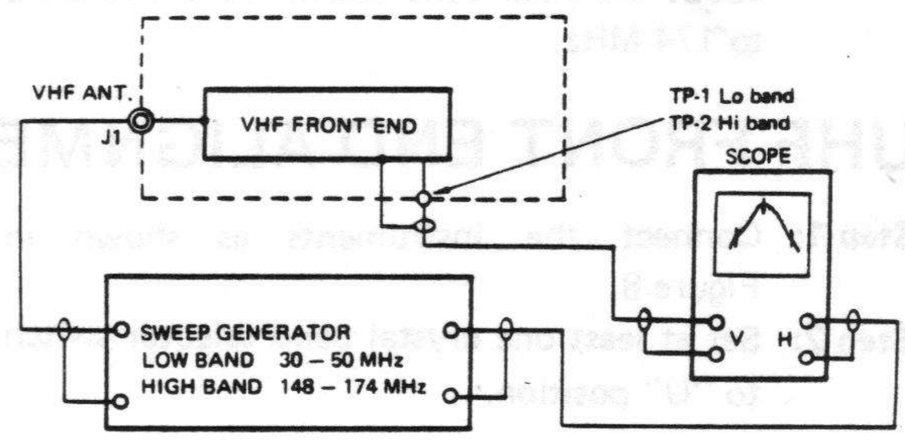

FIGURE 5. VHF LOW/HIGH BAND RF TEST EQPT. HOOK UP

LOW BAND RF ALIGNMENT

Step 1: Set at least one crystal band selector switch to "L" position.

Step 2: Adjust Frequency of sweep generator at 40 MHz and connect Scope to TP-1.

Step 3: Adjust T1, T2, T3 of RF section for maximum output and best curve symmetry as shown in Figure 6-1.

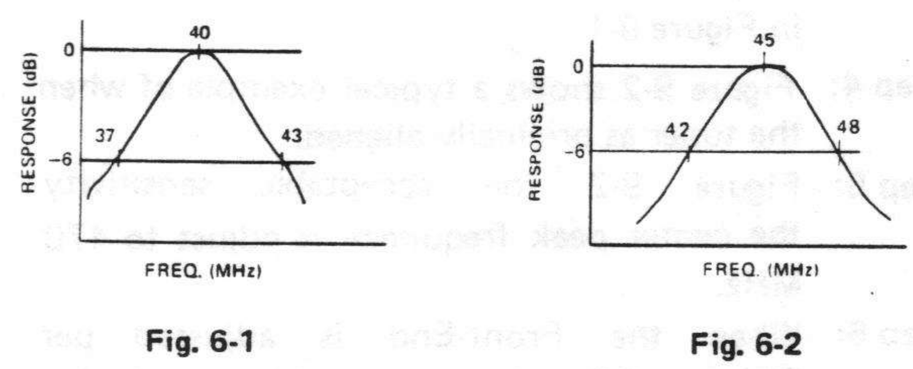

Fig. 6-1 **Fig. 6-2**

FIGURE 6. VHF Lo RF CHARACTERISTIC CURVE

Step 4: Figure 6-2 shows a typical example of when the center peak frequency is adjust to 45 MHz.

Step 5: When the Low band is adjusted per Figure 6-2 the adjustable frequency range will be about ±3 MHz band width from 30 MHz to 50 MHz.

HIGH BAND RF ALIGNMENT

Step 1: Set at least one crystal switch to "H" position. Connect Scope to TP-2.

Step 2: Adjust T4, T5 and T6 in RF section for maximum output and best curve symmetry as shown in Figure 7-1.

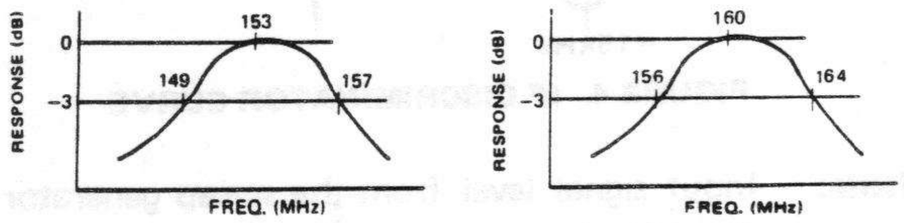

Fgi. 7-1 Fig. 7-2

FIGURE 7. VHF Hi RF CHARACTERISTIC CURVE

Step 3: Figure 7-2 shows a typical example of when the center peak frequency is adjust to 160 MHz.

Step 4: When the High band is adjusted per Figure 7-2 the adjustable frequency range will be about ±4 MHz band width from 148 MHz to 174 MHz.

UHF FRONT END ALIGNMENT

Step 1: Connect the instruments as shown in Figure 8.

Step 2: Set at least one crystal band selector switch to "U" position.

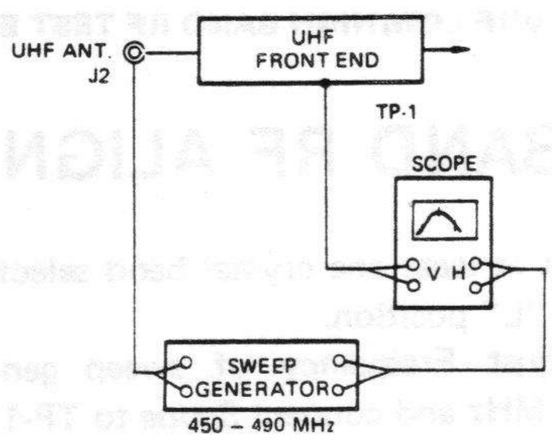

FIGURE 8. UHF FRONT END EQPT: HOOK UP

Step 3: Adjust TC1, TC2 and TC3 for maximum output and best curve symmetry as shown in Figure 9-1.

Step 4: Figure 9-2 shows a typical example of when the tuner as originally aligned.

Step 5: Figure 9-2 the acceptable sensitivity the center peak frequnecy is adjust to 470 MHz.

Step 6: When the Front-End is adjusted per Figure 9-2 the acceptable sensitivity frequency range will be about from 450MHz to 490MHz.

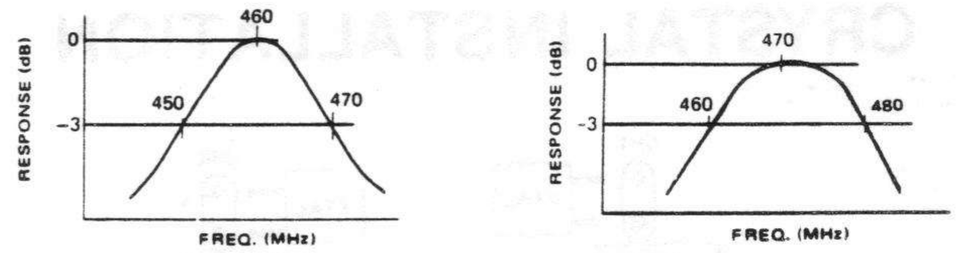

FIGURE 9-1 FIGURE 9-2

FIGURE 9. UHF RF CHARACTERISTIC CURVE

VHF LOW/HIGH, UHF LOCAL OSCILLATOR CHECK

Step 1: Insert all crystals in sockets.

Step 2: Couple the frequency counter thru a pickup coil to oscillator coil. Refer to Figure 10.

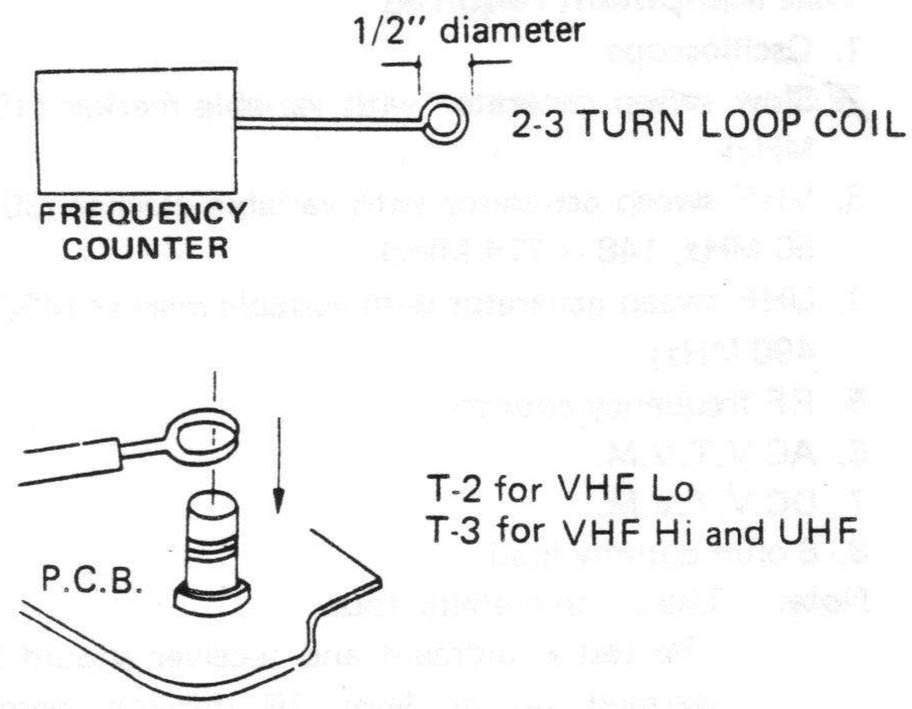

FIGURE 10. LOCAL OSCILLATOR COUPLING

Step 3: Check the frequencies of the appropriate oscillators as shown in the following chart. Do not make adjustments until or unless you perform the "Overall Alignment and Sensitivity" procedures noted on page 4.

Fr		CRYSTAL SWITCH POSITION	f osc	ALIGNMENT COIL
VHF LOW	30–50 MHz	L	Fr +10.7 MHz	T2 (OSC. P.C.B.)
VHF HIGH	148–174 MHz	H	(Fr–10.7 MHz)/3	T1, T3 (OSC. P.C.B.)
UHF	450–485 MHz	U	(Fr–44 MHz)/9	T3, T4 (OSC. P.C.B.)

Note: Crystal Frequency Calculation.
The crystal frequencies are obtained by the following formula;
VHF LOW Crystal frequency (MHz)
= Fr + 10.7
VHF HIGH Crystal frequency (MHz)
= (Fr – 10.7)/3
UHF Crystal frequency (MHz) = (Fr – 44)/9
Where Fr is the desired receive frequency, in MHz.

LOCAL OSCILLATOR FREQUENCY CHECK (10.245MHz)

Step 1: Connect Frequency Counter through a 10 pF capacitor to Q2 Emitter circuit of IF AMP. P.C. Board.

Step 2: Read frequency on the Frequency Counter - Normal: 10.245 MHz ±1 kHz.

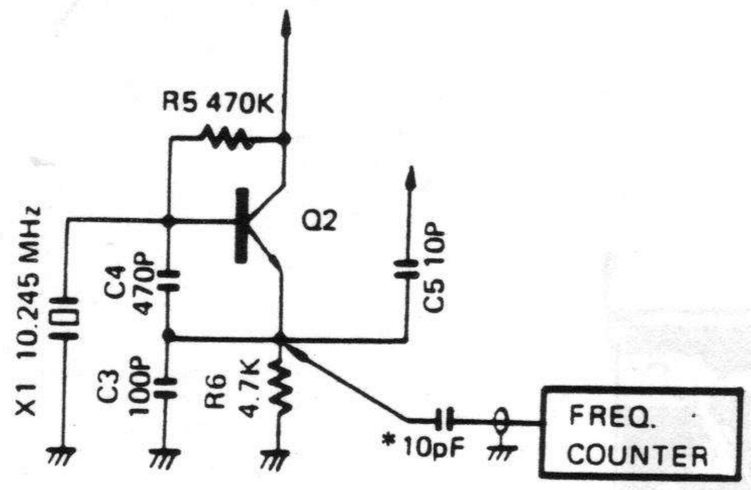

FIGURE 11. DIAGRAM

***Note:** Frequency Counter coupling capacitor should be as small a value as possible.
Frequency Counter should be High Impedance Type.

UHF LOCAL OSCILLATOR FREQUENCY CHECK

Step 1: Connect Frequency counter through a 1 pF capacitor to Q9 emitter circuit on RF/AF P.C. Board.

Step 2: Read frequency on the frequency counter. Normal: 54.7 MHz ±1 kHz

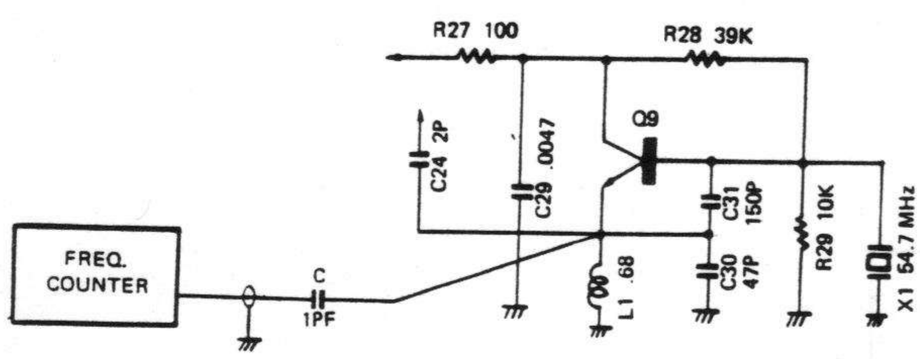

FIGURE 12. DIAGRAM

AFC ALIGNMENT

Step 1: Put a crystal in UHF position and crystal band selector switch to "U" position.

Step 2: Connect a DC V.T.V.M. to Drain of Transistor Q10 on RF/AF P.C. Board.

Step 3: Ground TP4 and adjust VR1 to 4 volts on the V.T.V.M.

Step 4: Remove ground from TP4 and continue to monitor voltage if it remains at 4 volts. If not, re-adjust T2 slightly to obtain precisely 4.0 volts. Recheck steps 3 and 4 if necessary.

UHF OVERALL ALIGNMENT AND SENSITIVITY MEASUREMENT

Step 1: Connect signal generator to UHF input and A.C. V.T.V.M. to speaker terminals.

Step 2: Turn the SQUELCH control fully counter-clockwise and set the frequency to receive band center 460 MHz.

Step 3: Adjust TC4 and T4 on the UHF front-end T3, T4 on the OSC Board and T7 on the RF/AF board to maximum sensitivity.

Step 4: Adjust the output of the generator to minimum and with no modulation and set VOLUME control for 0 dB reading on the VTVM.

Step 5: Increase output of the generator to obtain reading of −20 dB on the A.C. V.T.V.M. The generator output now equals the 20 dB noise quieting sensitivity.

VHF LOW/HIGH OVERALL ALIGNMENT AND SENSITVITY MEASUREMENT

Step 1: Connect signal generator to VHF input and A.C.V.T.V.M. to speaker terminals.

Step 2: Turn the SQUELCH control fully counter-clockwise, and with the generator at minimum output and with no modulation, adjust the VOLUME control on the set for a 0 dB (0.775 volts) reading on the A.C.V.T.V.M.

Step 3: Adjust T1 (Hi) and T2 (Lo) on the OSC. P.C. Board to maximum sensitivity.

Step 4: Increase the output of the signal generator to obtain a reading of −20 dB on the A.C. V.T.V.M. The generator output now equals the 20 dB quieting sensitivity.

Step 5: Tune the PRO-16 to the frequency of the signal generator (or vice versa).

Step 6: Turn VOLUME control fully clockwise. Set the signal generator for no modulation and minimum output.

Step 7: Adjust VOLUME control so that the output noise level shows 0 dB = 0.775 volt on the A.C.V.T.V.M.

Step 8: Increase the output level of signal generator so that the signal output is 20 dB below the noise output level. The S.G. output is now equal to the 20 dB noise quieting figure of the set.

NOTE 1: As supplied by the factory, this unit is set up to provide maximum sensitivity in ranges of 37–43 MHz for VHF Lo, 149–157 MHz for VHF Hi and 455–475 MHz for UHF. If a customer desires optimum performance for a frequency range other than this, you can realign for maximum sensitivity at a center frequency anywhere from about 30 MHz up to about 50 MHz for VHF Lo, 150 MHz to 170 MHz for VHF Hi and 450 to 485 for UHF. (Some UHF front-ends can be adjusted for reception even up to 490 MHz—don't promise a customer such coverage, but you can try). To achieve optimum sensitivity, realign the RF and Local Oscillator for the desired center frequency. Keep in mind that best sensitivity will cover only a bandwidth "window" of about 3/8/10 MHz total—adjust the sensitivity accordingly (compromise of frequency coverage may be necessary). Of course, be sure to use correct crystals.

NOTE 2: Alignment of T5 on OSC P.C. Board is not required. It happens to be adjustable only because of ease of parts procurement and does not need any adjustment.

ALIGNMENT POSITION

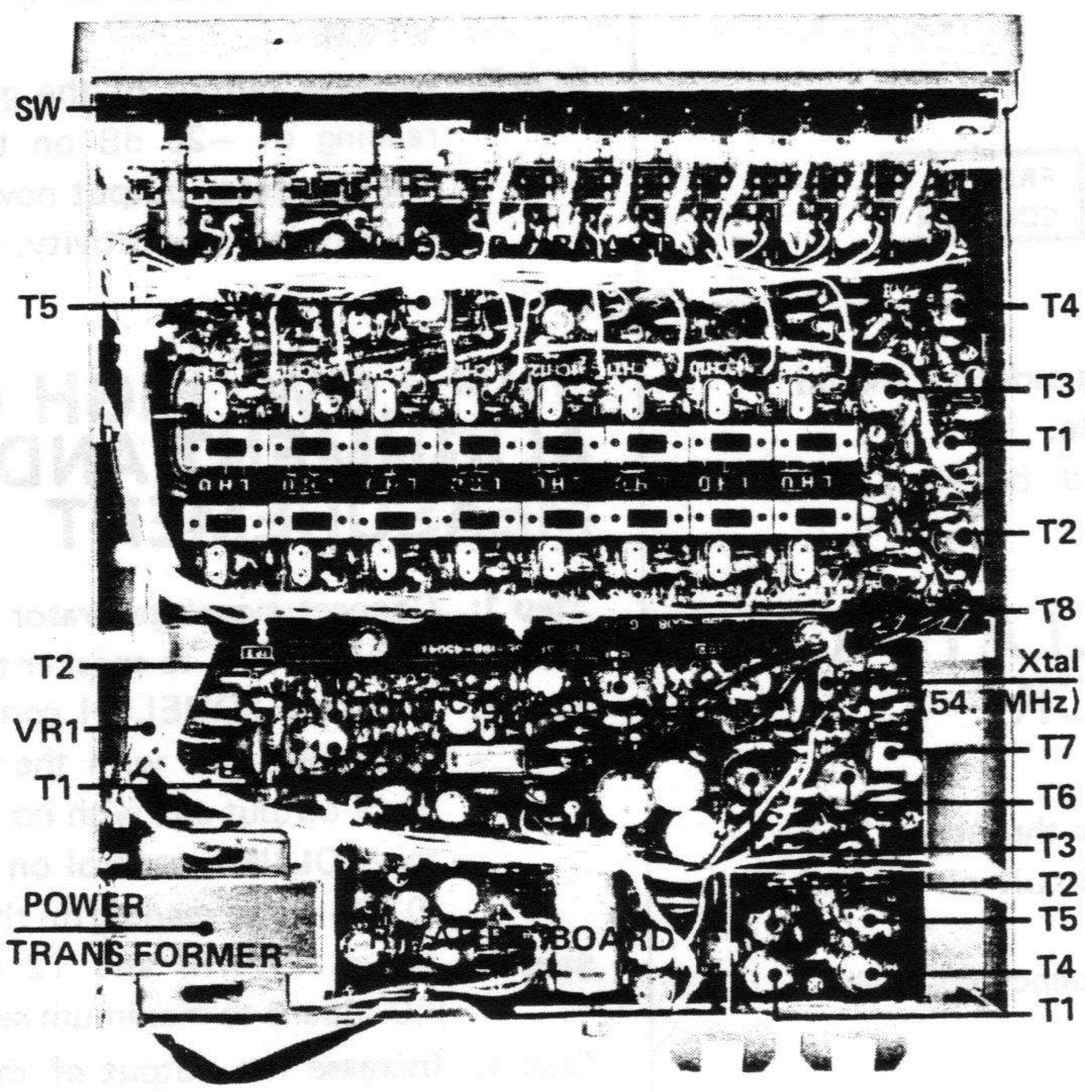

UHF FRONT-END

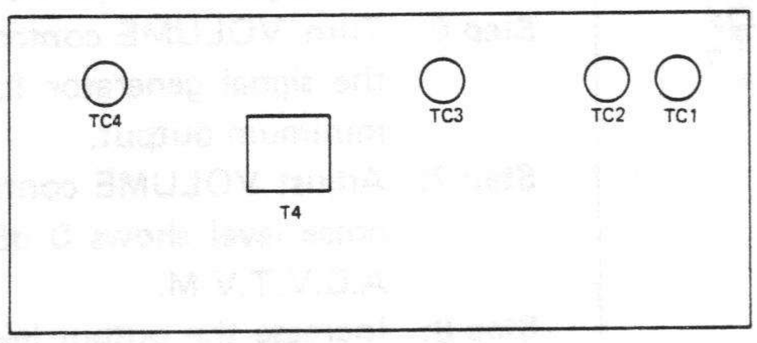

BLOCK DIAGRAM

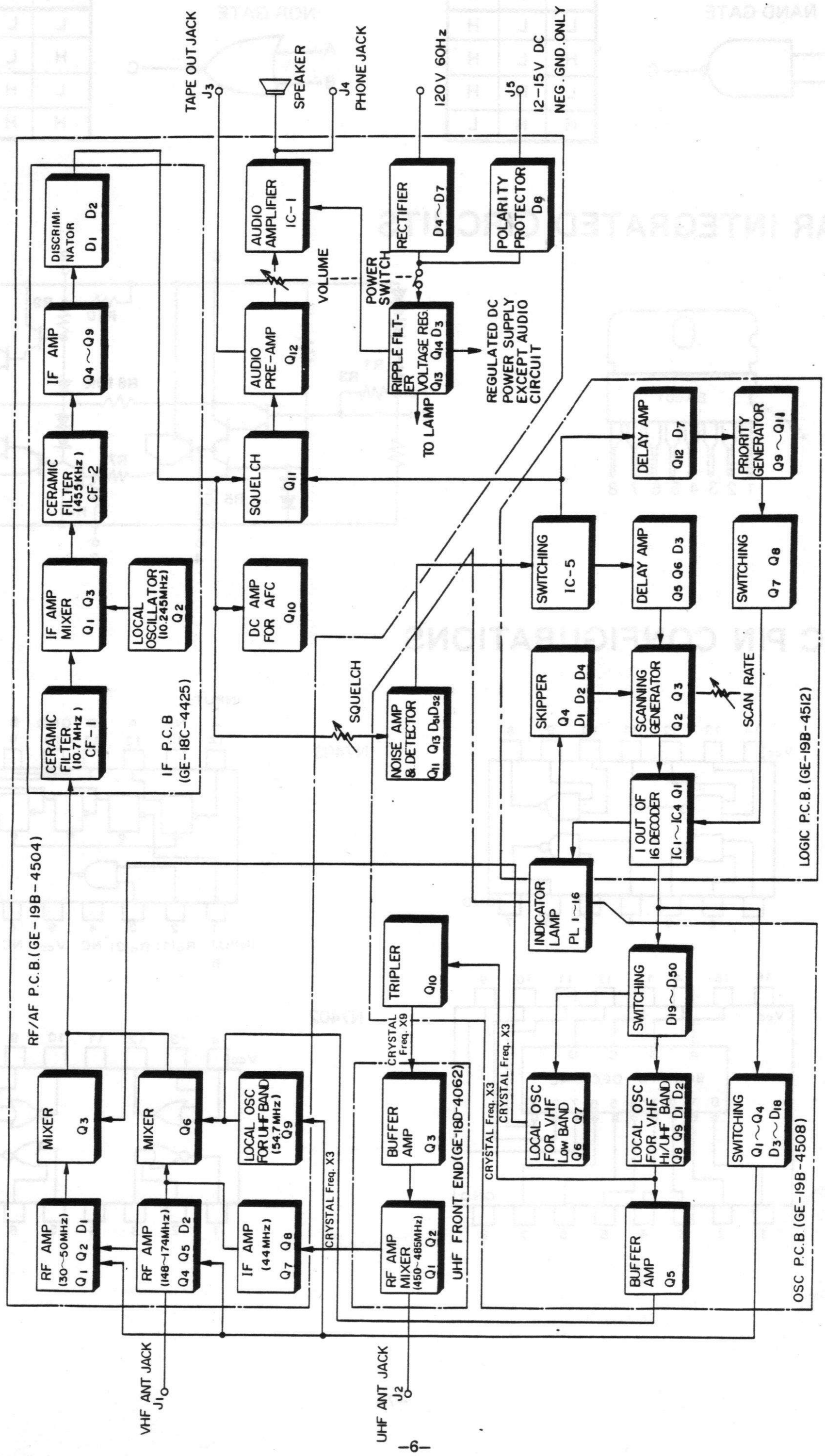

TTL IC TRUTH TABLE

NAND GATE

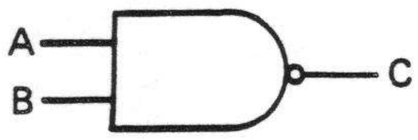

A	B	C
L	L	H
H	L	H
L	H	H
H	H	L

NOR GATE

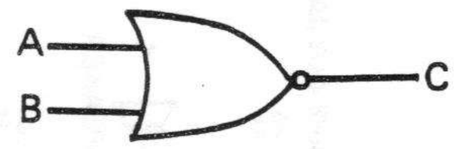

A	B	C
L	L	H
H	L	L
L	H	L
H	H	L

LINEAR INTEGRATED CIRCUITS

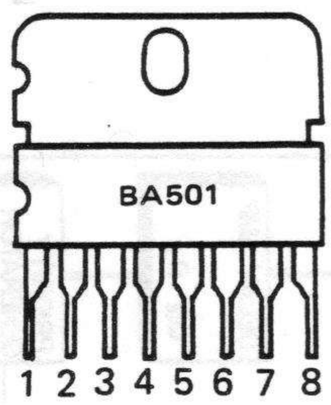

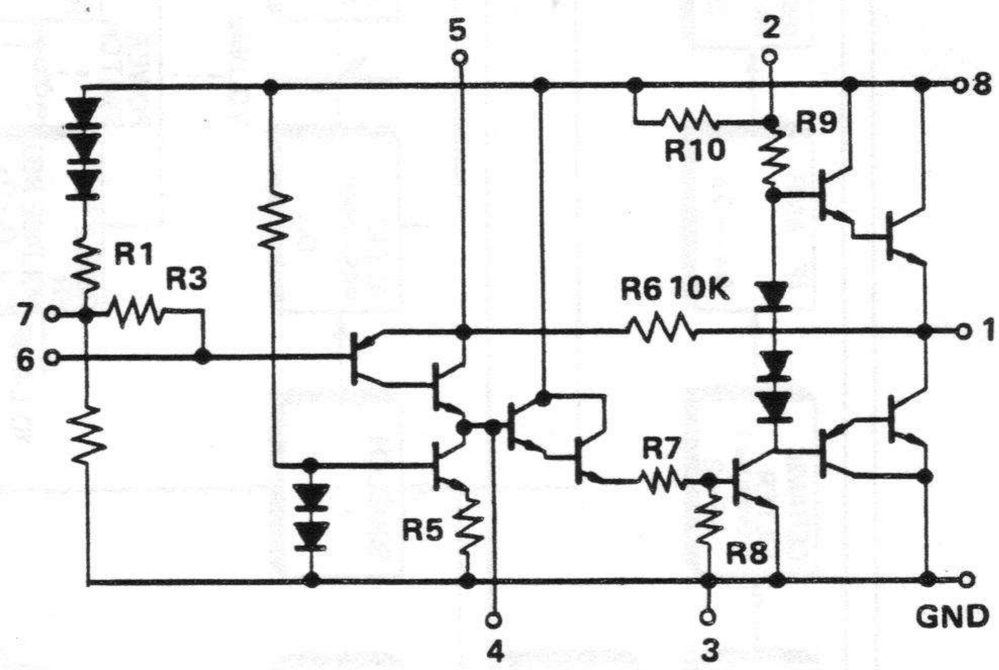

TTL IC PIN CONFIGURATIONS

N7400A

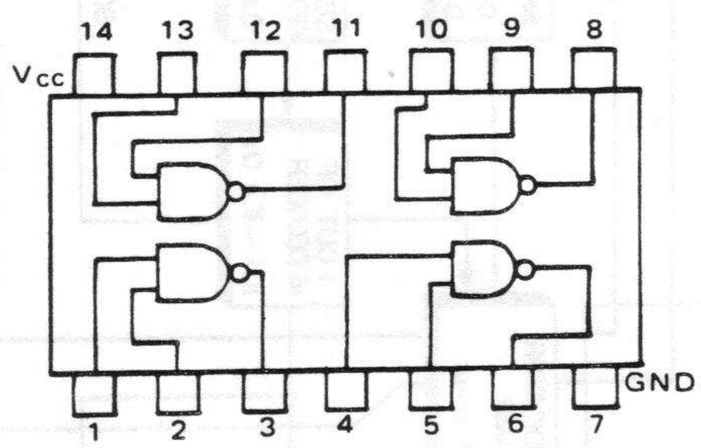

N7493

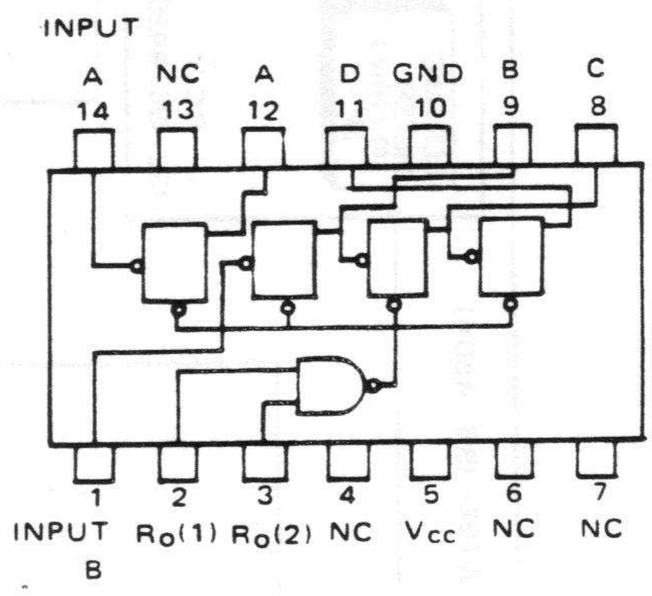

N74145

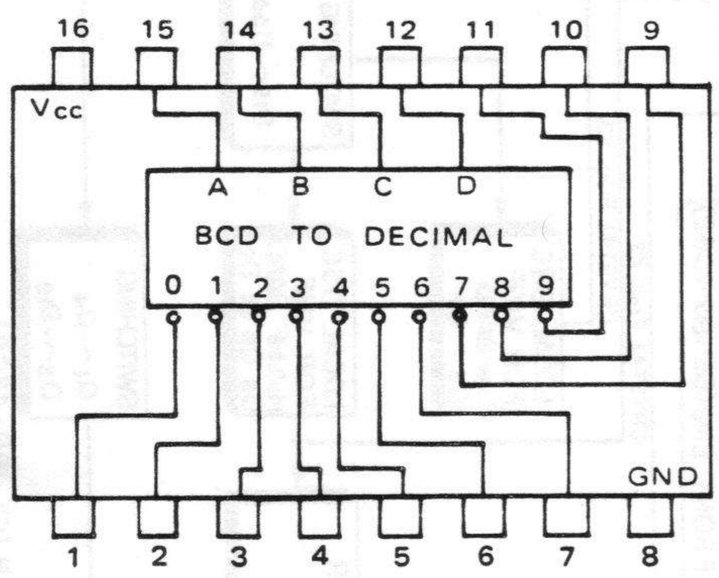

N7402

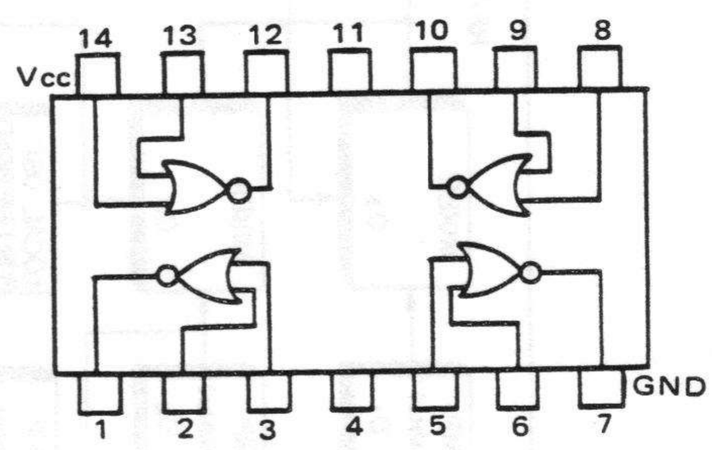

LOGIC CIRCUIT TRUTH TABLES

Channel No. \ PIN NO.	IC-4				IC-3		IC-1								IC-2							
	12	9	8	11	1	4	1	2	3	4	5	6	7	9	1	2	3	4	5	6	7	9
CH. 1	L	L	L	L	H	L	*L	H	H	H	H	H	H	H	H	H	H	H	H	H	H	H
CH. 2	H	L	L	L	H	L	H	*L	H	H	H	H	H	H	H	H	H	H	H	H	H	H
CH. 3	L	H	L	L	H	L	H	H	*L	H	H	H	H	H	H	H	H	H	H	H	H	H
CH. 4	H	H	L	L	H	L	H	H	H	*L	H	H	H	H	H	H	H	H	H	H	H	H
CH. 5	L	L	H	L	H	L	H	H	H	H	*L	H	H	H	H	H	H	H	H	H	H	H
CH. 6	H	L	H	L	H	L	H	H	H	H	H	*L	H	H	H	H	H	H	H	H	H	H
CH. 7	L	H	H	L	H	L	H	H	H	H	H	H	*L	H	H	H	H	H	H	H	H	H
CH. 8	H	H	H	L	H	L	H	H	H	H	H	H	H	*L	H	H	H	H	H	H	H	H
CH. 9	L	L	L	H	L	H	H	H	H	H	H	H	H	H	*L	H	H	H	H	H	H	H
CH. 10	H	L	L	H	L	H	H	H	H	H	H	H	H	H	H	*L	H	H	H	H	H	H
CH. 11	L	H	L	H	L	H	H	H	H	H	H	H	H	H	H	H	*L	H	H	H	H	H
CH. 12	H	H	L	H	L	H	H	H	H	H	H	H	H	H	H	H	H	*L	H	H	H	H
CH. 13	L	L	H	H	L	H	H	H	H	H	H	H	H	H	H	H	H	H	*L	H	H	H
CH. 14	H	L	H	H	L	H	H	H	H	H	H	H	H	H	H	H	H	H	H	*L	H	H
CH. 15	L	H	H	H	L	H	H	H	H	H	H	H	H	H	H	H	H	H	H	H	*L	H
CH. 16	H	H	H	H	L	H	H	H	H	H	H	H	H	H	H	H	H	H	H	H	H	*L

NOTE: H = high level L = low level Marked * = Pilot lamp "on"

WIRING DIAGRAM

Section	Position No. (From)	Position No. (To)		Color
LOGIC P.C. Board (JB connector)	JB1	JB1	(SCAN RATE VR)	BLK
	JB2	JB2	(OSC. P.C. Board)	GRY
	JB3	JB3	"	VIO
	JB4	JB4	"	BLU
	JB5	JB5	"	GRN
	JB6	JB6	"	YEL
	JB7	JB7	"	ORG
	JB8	JB8	"	RED
	JB9	JB9	"	BRN
	JB10	JB10	"	WHT
LOGIC P.C. Board (JC connector)	JC1	JC1	(OSC. P.C. Board)	GRY
	JC2	JC2	"	BLK
	JC3	JC3	"	VIO
	JC4	JC4	"	BLU
	JC5	JC5	"	GRN
	JC6	JC6	"	YEL
	JC7	JC7	"	ORG
	JC8	JC8	"	RED
	JC9	JC9	"	BRN
	JC10	JC10	"	WHT
LOGIC P.C. Board (JA connector)	JA1	JA1	(OSC. P.C. Board)	BRN
	JA2	JA2	(RF/AF P.C. Board)	RED
	JA3	JA3	(RF/AF P.C. Board)	ORG
	JA4	JA4	(RF/AF P.C. Board)	YEL
	JA5	JA5	(OSC. P.C. Board)	GRN
	JA6	JA6	(OSC. P.C. Board)	BLU
	JA7	JA7	(SCAN RATE VR)	VIO
	JA8	JA8	(OSC. P.C. Board)	GRY
	JA9	JA9	(OSC. P.C. Board)	BLK
	JA10	JA10	(OSC. P.C. Board)	WHT

TOP VIEW

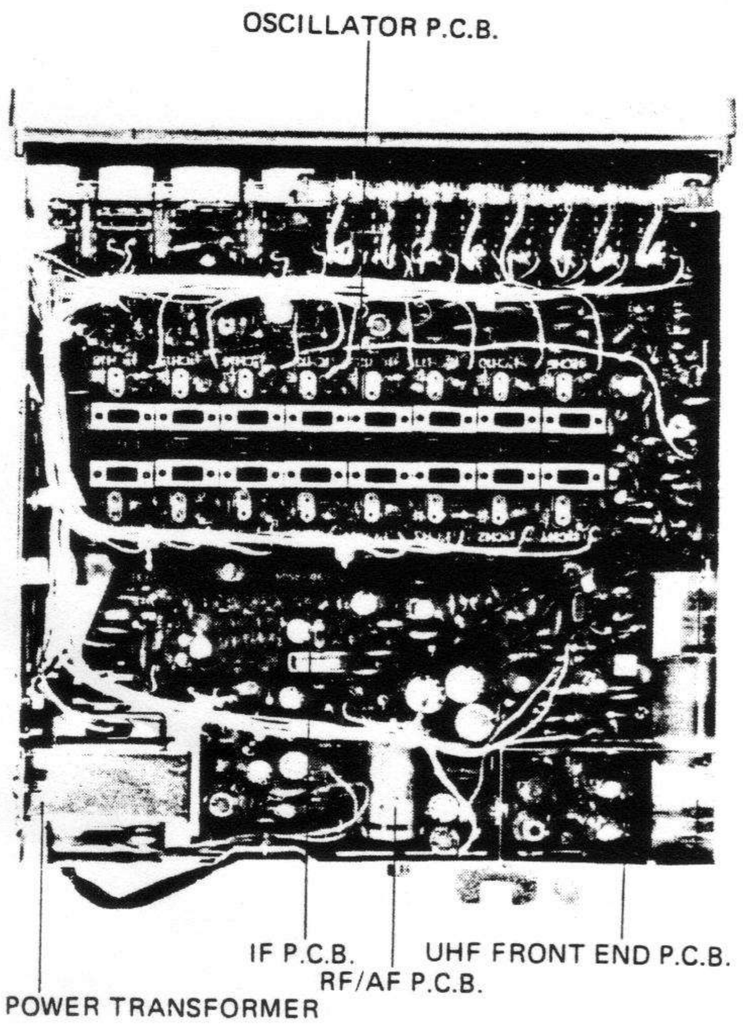

BOTTOM VIEW

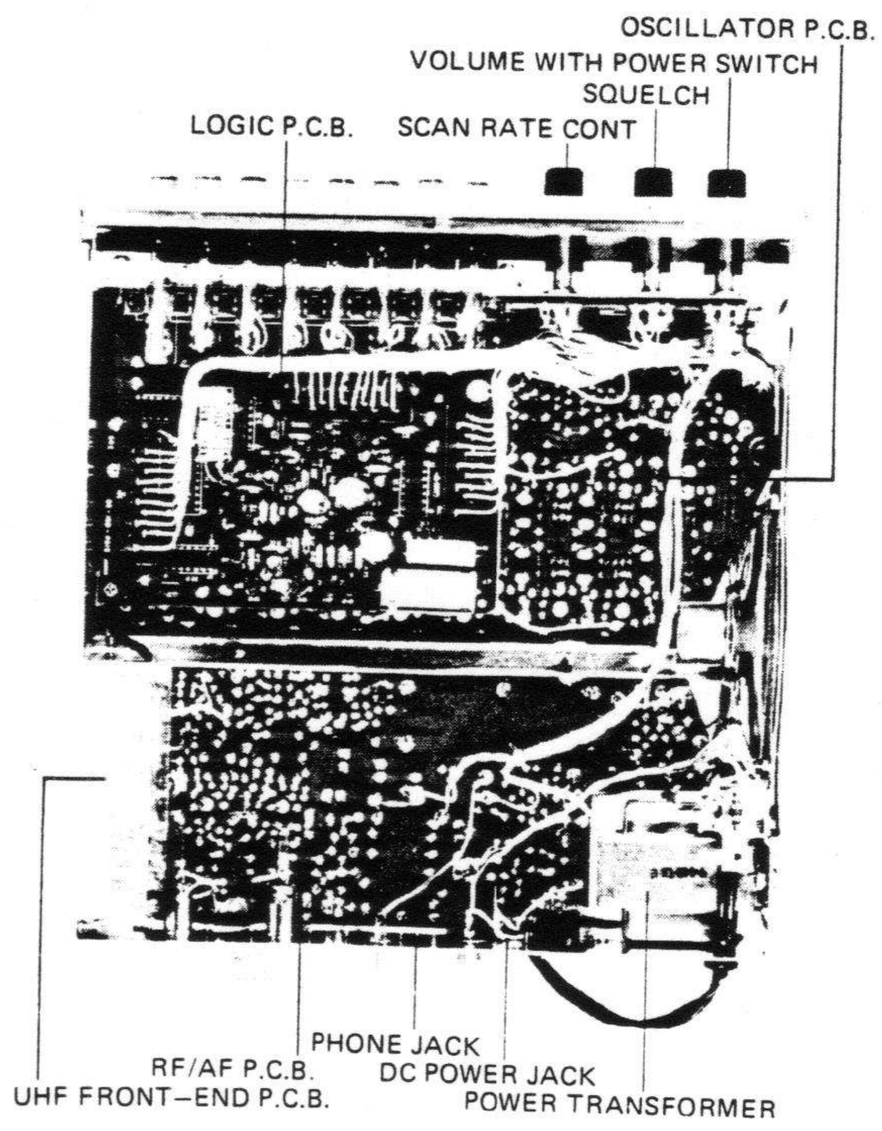

UHF FRONT END P.C. BOARD (TOP VIEW)

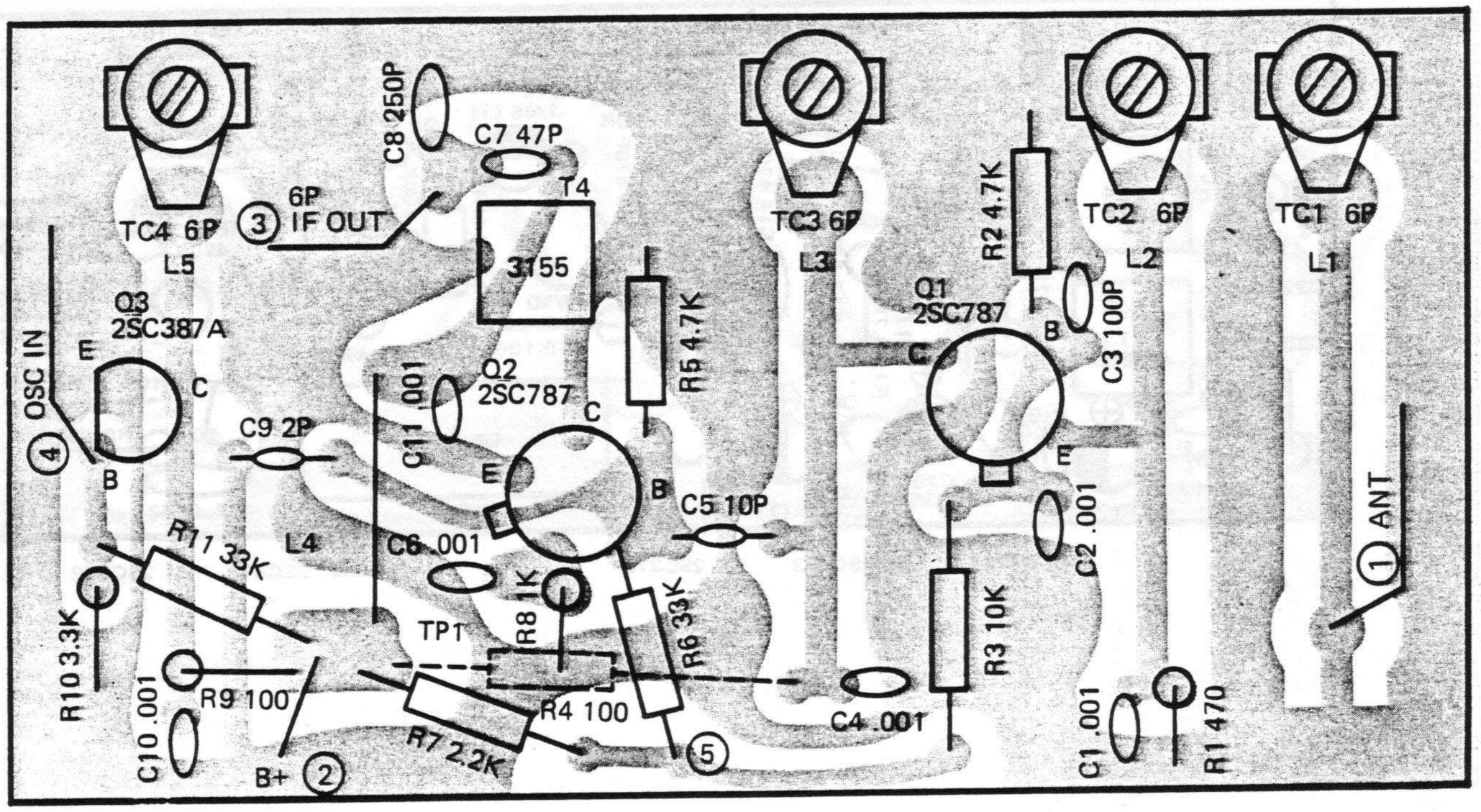

UHF FRONT END P.C. BOARD (BOTTOM VIEW)

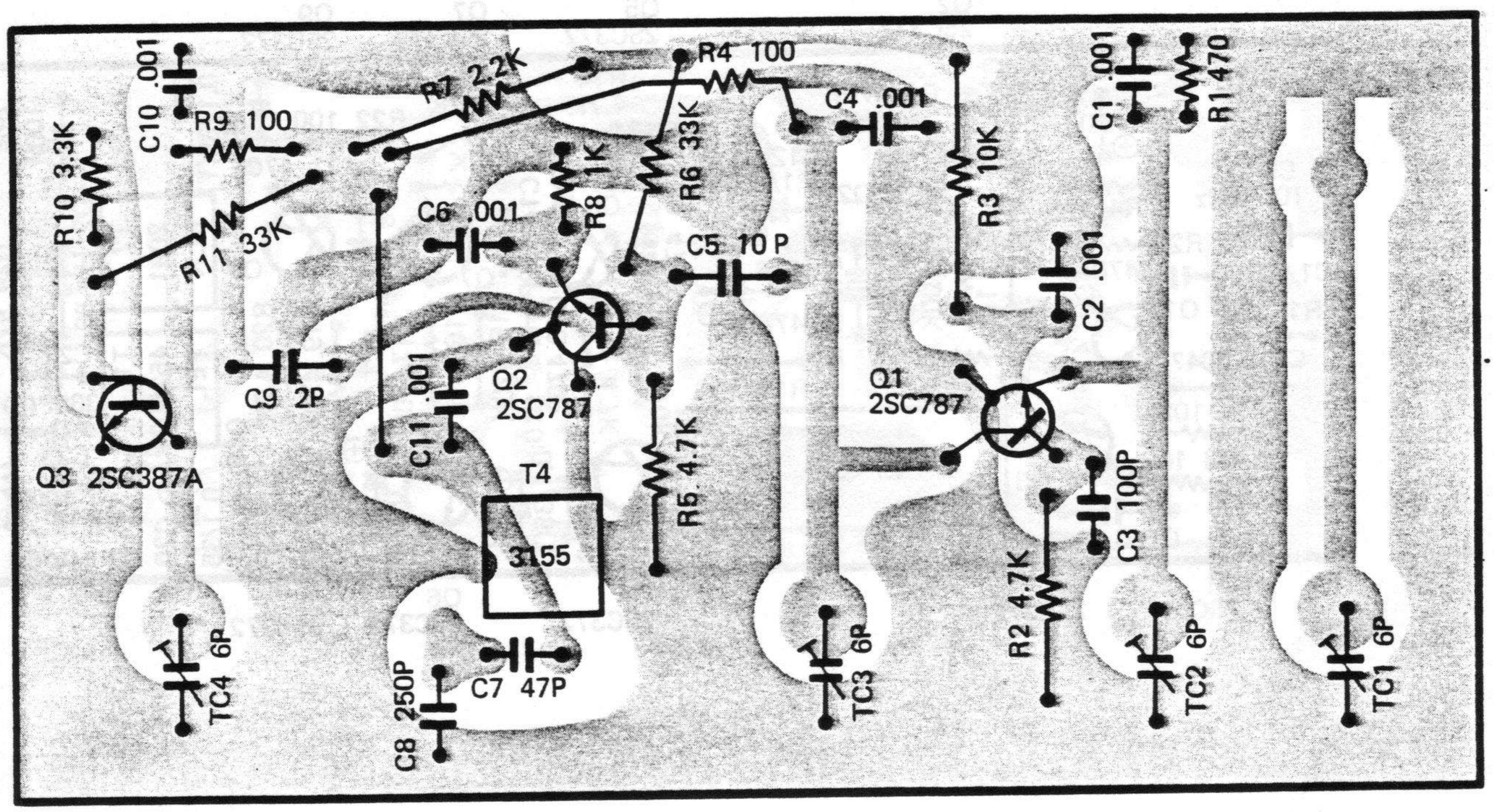

IF P.C. BOARD (TOP VIEW)

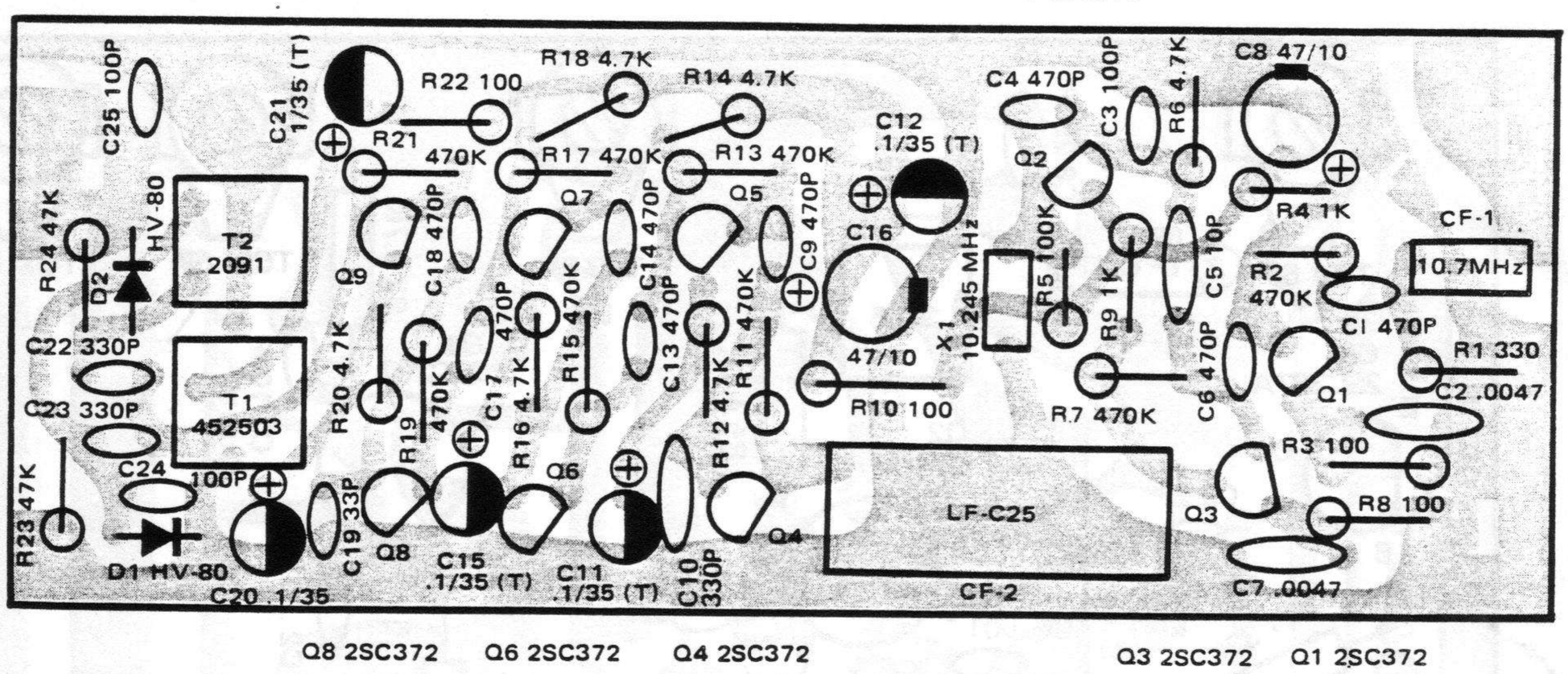

IF P.C. BOARD (BOTTOM VIEW)

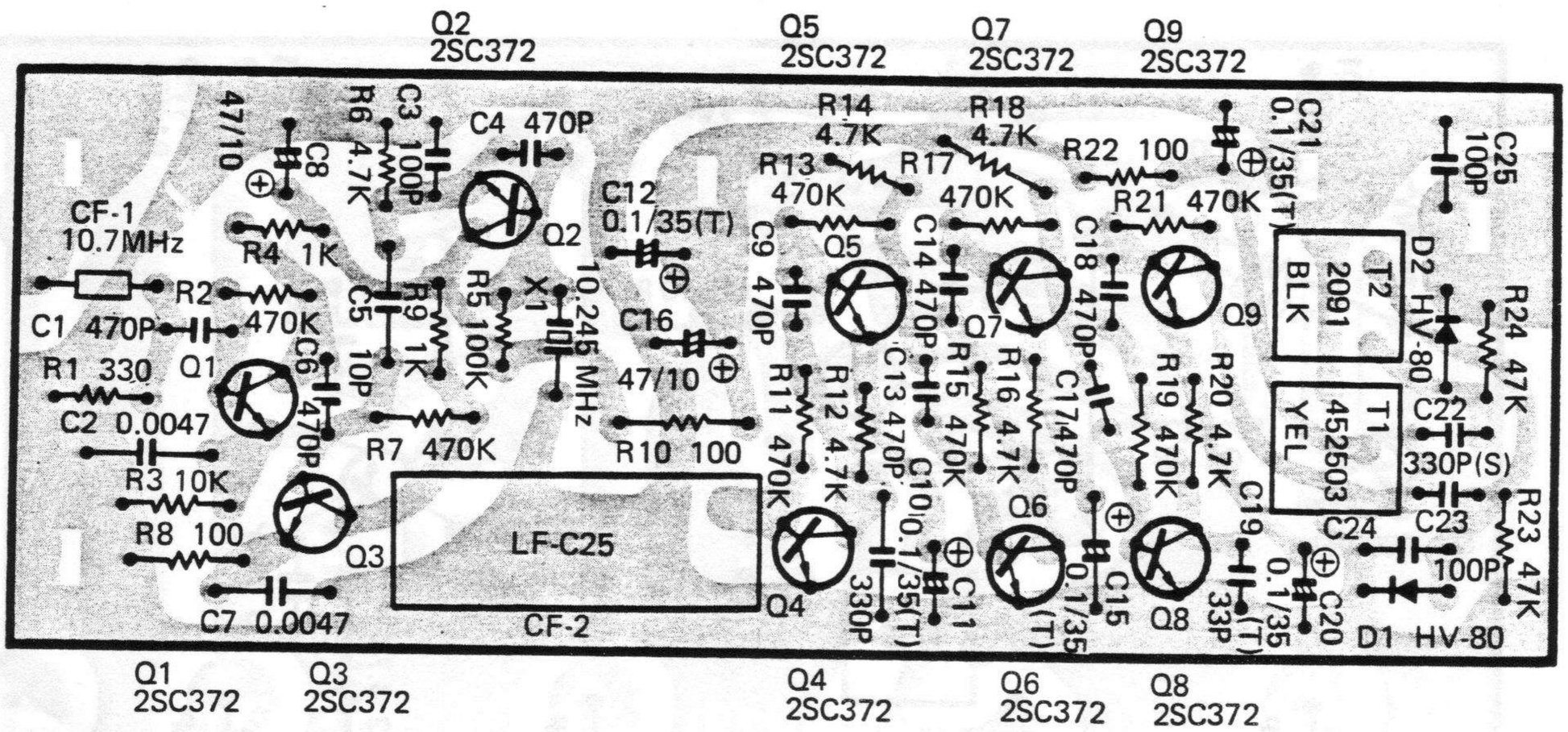

OSCILLATOR P.C. BOARD (TOP VIEW)

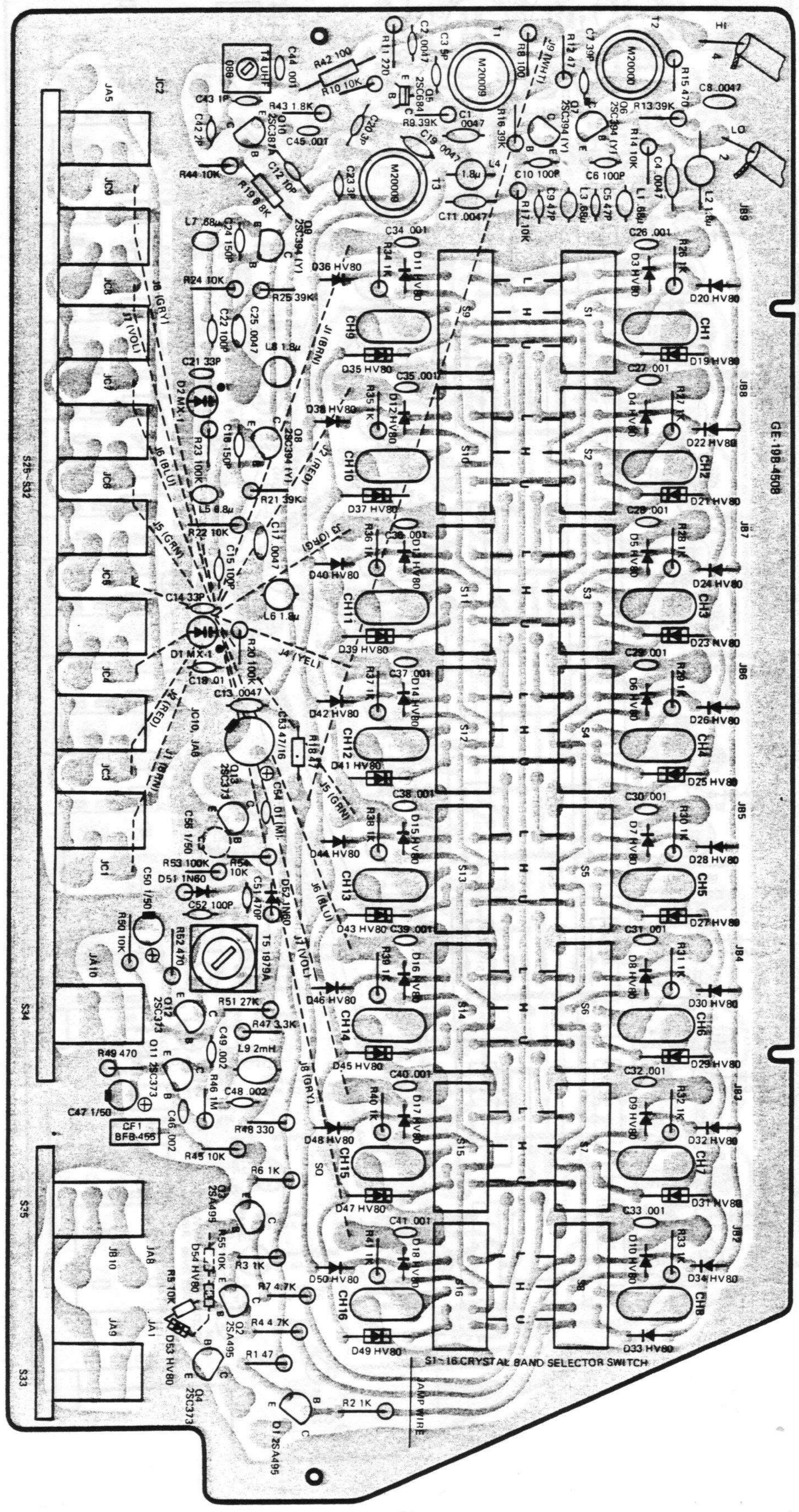

OSCILLATOR P.C. BOARD (BOTTOM VIEW)

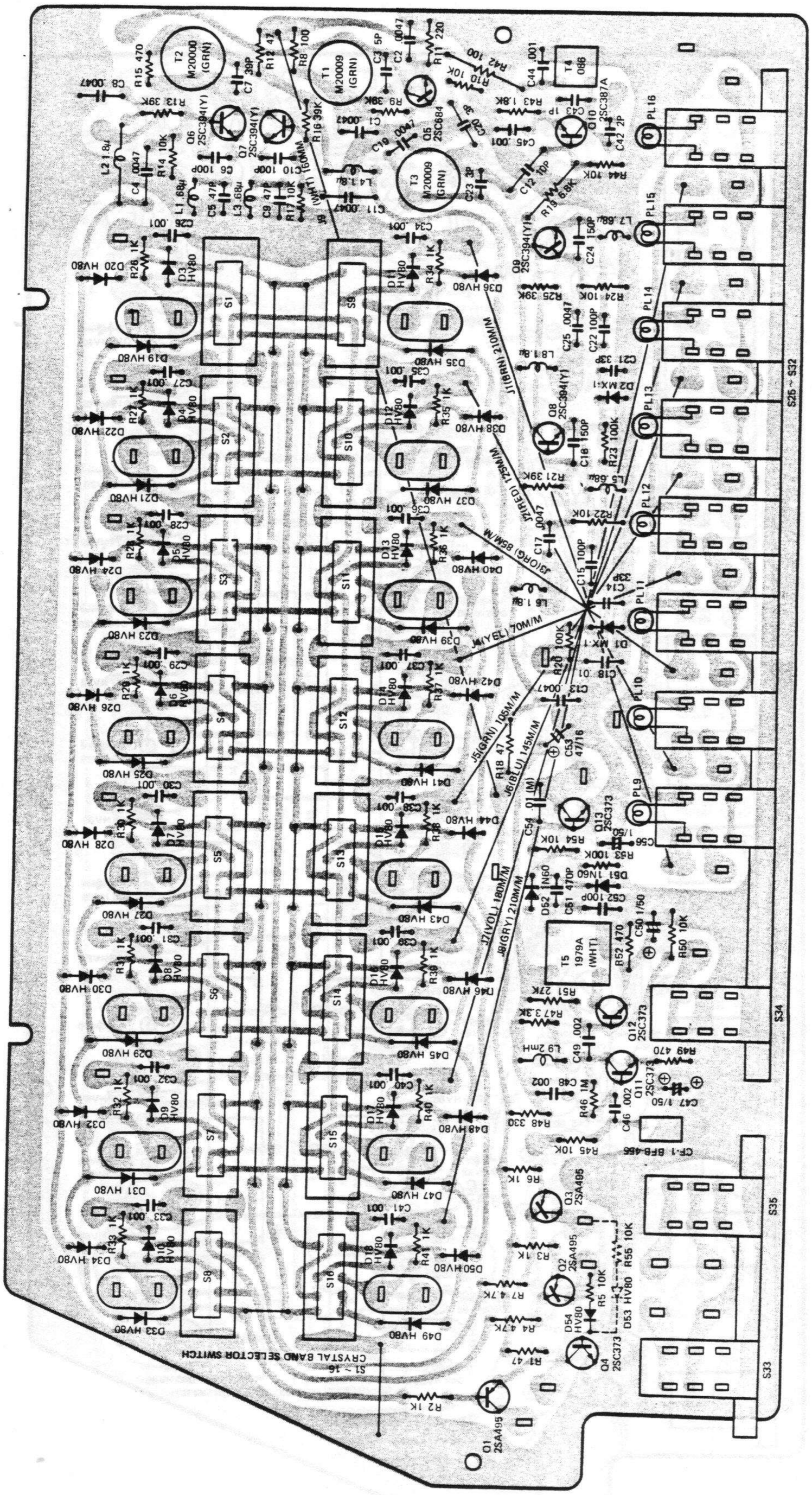

RF/AF P.C. BOARD (TOP VIEW)

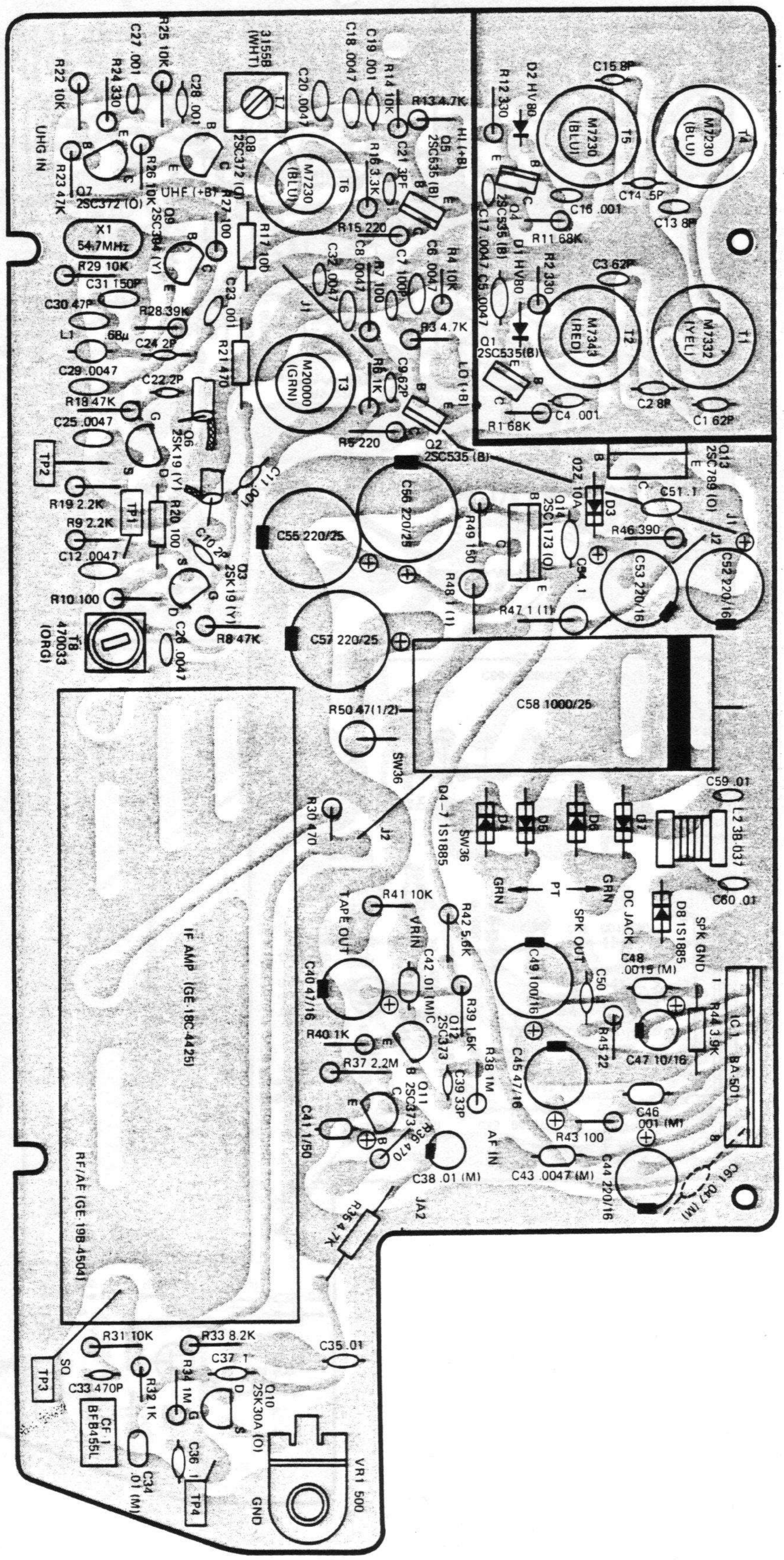

RF/AF P.C. BOARD (BOTTOM VIEW)

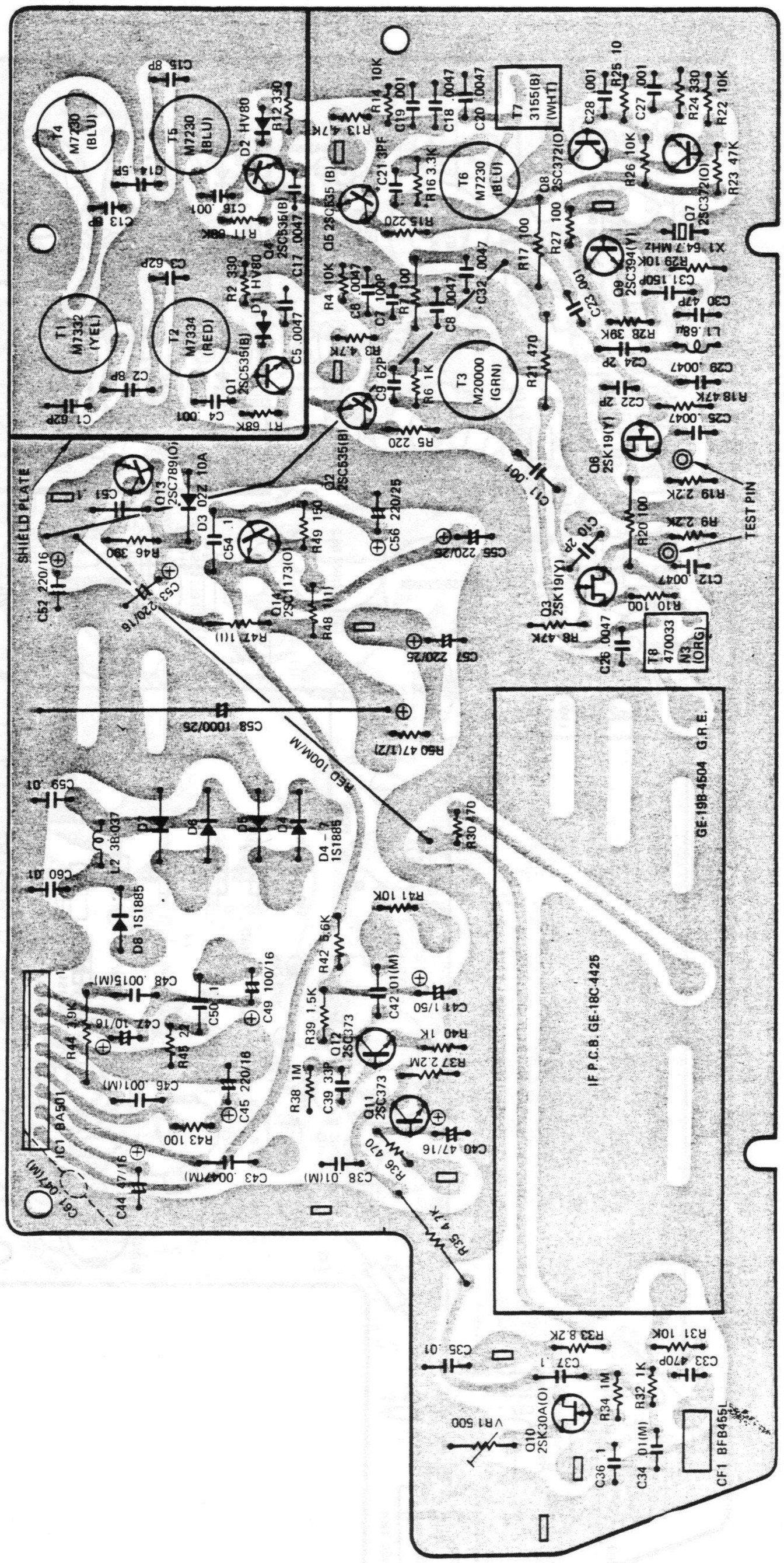

LOGIC P.C. BOARD (TOP VIEW)

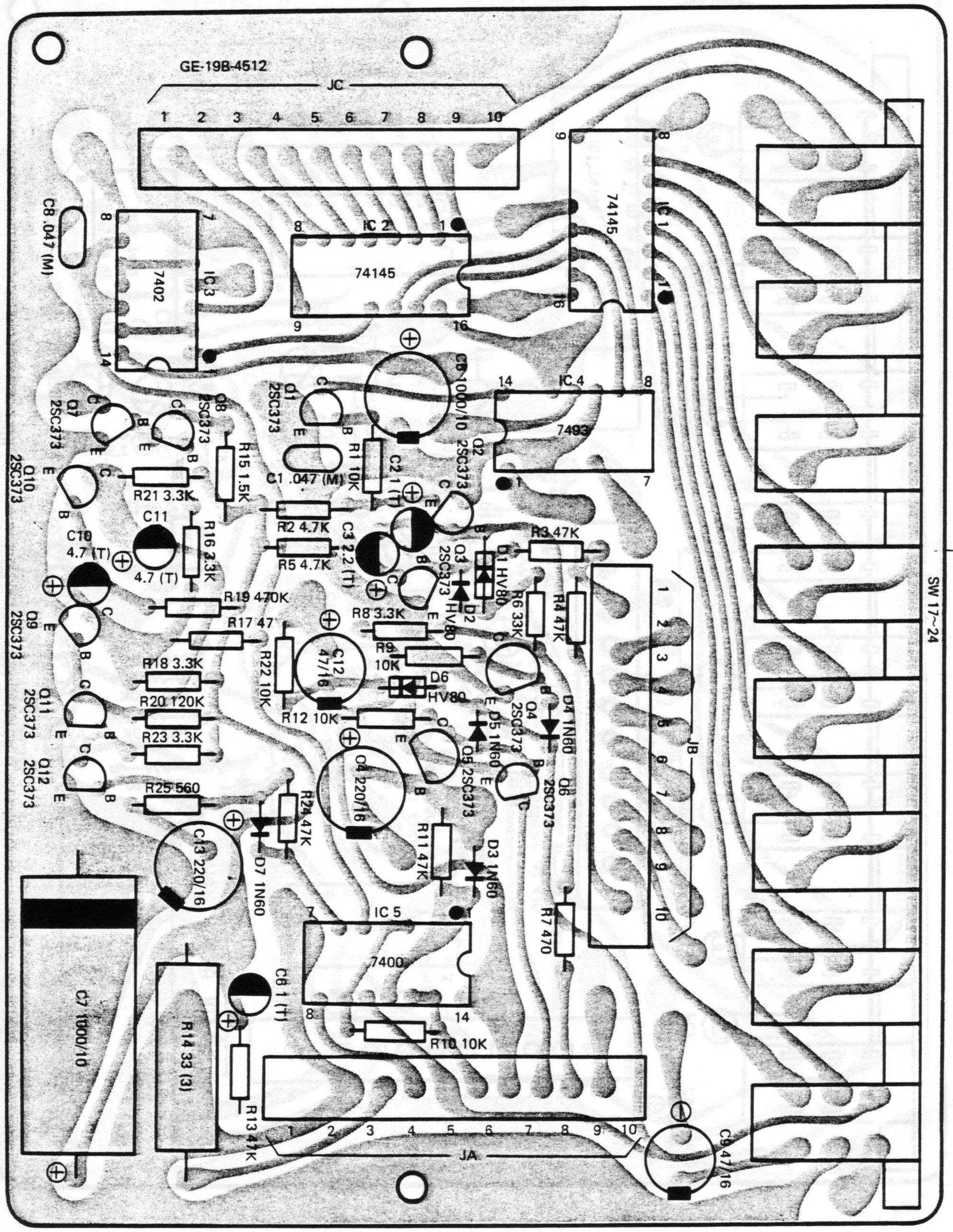

LOGIC P.C. BOARD (BOTTOM VIEW)

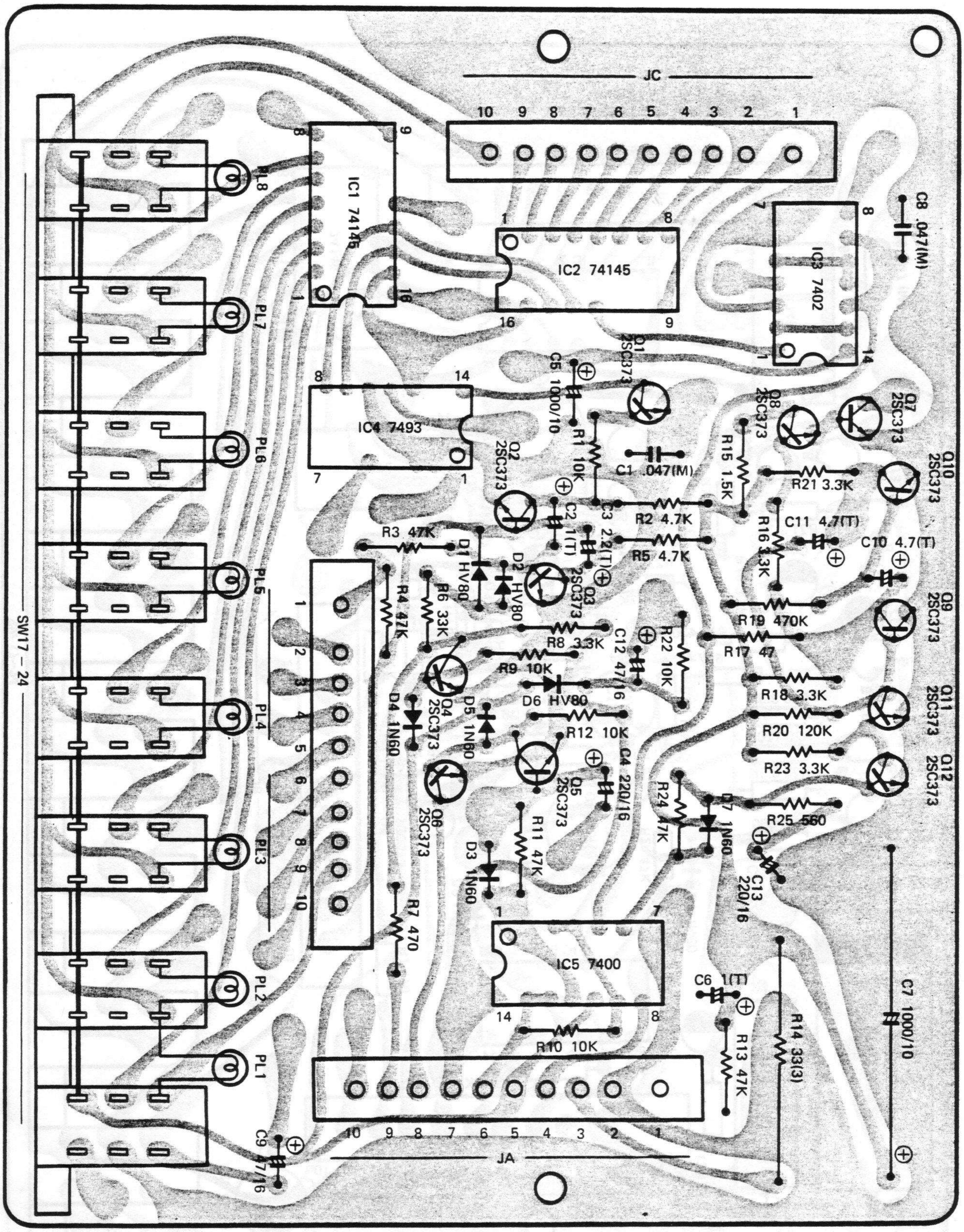

TROUBLE SHOOTING

Symptom	Possible cause
1) Pilot Lamp does not light and no sound output. Power Switch : ON Channel Switch : ON Volume Control : MAX.	A) Faulty line power cord. B) Defective power transformer. C) Defective power switch. D) Defective diodes D4 to D7 of RF/AF section and/or defective associated circuit component. E) Defective fuse. (DC only) F) Faulty DC jack. (DC only) G) Defective diode D8. (DC only)
2) Channel lamp lights but no sound. Channel Switch : ON Volume Control : MAX. Squelch Control : MIN.	A) Defective speaker. B) Defective speaker jack. C) Faulty transistors Q11 to Q14 on RF/AF section and/or integrated circuit IC-1 and/or faulty associated circuit component. D) Faulty IF amplifier circuit component.
3) Sound but channel lamp does not light. Channel Switch : ON Volume Control : MAX. Squelch Control : MIN.	A) Defective channel switch or defective channel lamp. B) Defective connector (JA, JB, JC). C) Defective R50 on RF/AF P.C. Board. D) Problem with integrated circuit IC-1 to IC-3 of LOGIC section. E) Faulty transistors Q7, Q8 of LOGIC section.
4) Does not scan and Squelch does not operate.	A) Defective Squelch control and/or connector. B) Defective IF amplifier circuit. C) Defective noise amplifier or noise detector and/or defective circuit component parts. D) Defective integrated circuit IC-5 of LOGIC section.
5) Does not scan but Squelch operates.	A) Defective AUTO/MANUAL switch or connector. B) Problem with integrated circuit IC-1 to IC-4 and/or transistors Q1 to Q6 of LOGIC section and/or defective circuit component parts.
6) Priority channel does not operate.	A) Faulty priority switch or connector. B) Problem with integrated circuits IC-1 to IC-5 and/or transistors Q7 to Q12 of LOGIC section defective and/or circuit component parts.
7) Manual selector does not operate.	A) Faulty manual selector switch, AUTO/MANUAL switch and/or connector.
8) Skipper does not operate.	A) Defective transistor Q4, diode D4 of LOGIC section and/or defective circuit component parts.
9) Delay does not operate.	A) Faulty delay switch or connector. B) Defective Q5, Q6 of LOGIC section and/or defective circuit component parts.

Symptom	Possible cause
10) VHF (Lo) band does not operate but VHF (Hi), UHF band operate. Noise is audible.	A) Defective crystal. B) Check up crystal band selector switch adjust at L position. C) Weak crystal and/or one of transistors Q6 to Q7 of OSC. section defective or defective circuit component parts. D) Defective RF amplifier, MIXER of AF/RF section and/or defective circuit component parts.
11) VHF (Hi) band does not operate but VHF (Lo), UHF band operate. Noise is audible.	A) Defective crystal. B) Check crystal switch and/or position (H). C) Defective BUFFER amplifier or OSC. section and/or defective circuit component parts.
12) UHF band does not operate but VHF Lo/Hi band operate.	A) Defective crystal. B) Check crystal switch and/or position (U). C) Defective UHF Front end. D) Defective UHF IF amplifier, LOCAL OSC. and TRIPLER of RF/AF, OSC. section and/or defective circuit component parts.
13) VHF Lo, Hi and UHF band do not operate.	A) RF/AF circuit defective. B) Defective OSC. circuit. C) Defective IF amplifier circuit.
14) VHF Lo, Hi and UHF sound distorted.	A) Defective crystal. B) Defective amplifier circuit. C) Defective AUDIO amplifier circuit.
15) VHF Lo, Hi and UHF, low sensitivity.	A) Check alignment (frequency range). B) Defective RF AMP. and IF AMP.
16) VHF Lo, low sensitivity.	A) Weak crystal. B) Faulty adjustment of RF amplifier and/or faulty circuit component parts.
17) VHF High, low sensitivity.	A) Weak crystal. B) Faulty adjustment of RF amplifier and/or faulty circuit component parts.
18) UHF low sensitivity.	A) Weak crystal. B) Faulty adjustment of UHF Front end and/or faulty circuit component parts.
19) UHF band AFC does not operate.	A) Faulty DC amplifier. B) Varicap diodes D1 and D2 of OSC. section defective and/or defective circuit component parts.

UHF FRONT END P.C. BOARD PARTS LIST

Ref. No.	Description				RS Parts Number	MFR's Parts Number
	CAPACITORS					
C1, 2	Ceramic	0.001μF		±10%		SCP-60
C3	Ceramic	100pF		±10%		FC-70
C4	Ceramic	0.001μF		±10%		SCP-60
C5	Ceramic	10pF		±0.5PF		FCC-50
C6	Ceramic	0.001μF		±10%		SCP-60
C7	Ceramic	47pF		±10%		FC-60
C8	Ceramic	250pF		±10%		FC-90
C9	Ceramic	2pF		±0.25PF		FCC-50
C10, 11	Ceramic	0.001μF		±10%		SCP-60
TC1—4	Trimmer	6pF			C-0583	ECV-1ZW06
	RESISTORS					
R1	Carbon film	470Ω	1/4W	±5%		ERD-14VJ-471
R2	Carbon film	4.7KΩ	1/4W	±5%		ERD-14VJ-472
R3	Carbon film	10KΩ	1/4W	±5%		ERD-14TJ-103
R4	Carbon film	100Ω	1/4W	±5%		ERD-14TJ-101
R5	Carbon film	4.7KΩ	1/4W	±5%		ERD-14VJ-472
R6	Carbon film	33KΩ	1/4W	±5%		ERD-14TJ-333
R7	Carbon film	2.2KΩ	1/4W	±5%		ERD-14TJ-222
R8	Carbon film	1KΩ	1/4W	±5%		ERD-14VJ-102
R9	Carbon film	100Ω	1/4W	±5%		ERD-14VJ-101
R10	Carbon film	3.3KΩ	1/4W	±5%		ERD-14VJ-332
R11	Carbon film	33KΩ	1/4W	±5%		ERD-14TJ-333
	SEMICONDUCTORS					
Q1, 2	Transistor	silicon	Toshiba		2SC787(BL)	2SC787(BL)
Q3	Transistor	silicon	Toshiba		2SC387(A)	2SC387(A)
	COIL					
T4	Coil	IFT			CA-7150	R12 3155B
	MISCELLANEOUS					
	Pin terminal				HB-0431	59BS-3015
	Front-end box				HB-1643	GE-18C-4257
	Front-end shield plate A				HB-1644	GE-18D-4258
	Front-end shield plate B				HB-1645	GE-18D-4259
	P.C. Board		UL listed		C-4500	GE-18D-4062

IF P.C. BOARD PARTS LIST

Ref. No.	Description				RS Parts Number	MFR's Parts Number
	CAPACITORS					
C1	Ceramic	470pF		±10%		SCP-50
C2	Ceramic	0.0047μF		±10%		SCP-100
C3	Ceramic	100pF		±10%		FC-70
C4	Ceramic	470pF		±10%		SCP-50
C5	Ceramic	10pF		±10%		FCC-50
C6	Ceramic	470pF		±10%		SCP-50
C7	Ceramic	0.0047μF		±10%		SCP-100
C8	Electrolytic	47μF/10WV		−10 +50%		CE04W1A470
C9	Ceramic	470pF		±10%		SCP-50
C10	Ceramic	330pF		±10%		SCP-50
C11, 12	Tantalum	0.1μF/35WV		±20%		
C13, 14	Ceramic	470pF		±10%		SCP-50
C15	Tantalum	0.1μF/35WV		±20%		
C16	Electrolytic	47μF/10WV		−10 +50%		CE04W1A470
C17, 18	Ceramic	470pF		±10%		SCP-50
C19	Ceramic	33pF		±10%		FC-50
C20, 21	Tantalum	0.1μF/35WV		±20%		
C22, 23	Polystyrene	330p		±20%		S0C1H331J
C24, 25	Ceramic	100pF		±10%		FC-70
	RESISTORS					
R1	Carbon film	330Ω	1/4W	±5%		ELR-25J-331
R2	Carbon film	470KΩ	1/4W	±5%		ELR-25J-474
R3	Carbon film	100Ω	1/4W	±5%		ELR-25J-101
R4	Carbon film	1KΩ	1/4W	±5%		ELR-25J-102
R5	Carbon film	100KΩ	1/4W	±5%		ELR-25J-104
R6	Carbon film	4.7KΩ	1/4W	±5%		ELR-25J-472
R7	Carbon film	470KΩ	1/4W	±5%		ELR-25J-474
R8	Carbon film	100Ω	1/4W	±5%		ELR-25J-101
R9	Carbon film	1KΩ	1/4W	±5%		ELR-25J-102
R10	Carbon film	100Ω	1/4W	±5%		ELR-25J-101
R11	Carbon film	470KΩ	1/4W	±5%		ELR-25J-474
R12	Carbon film	4.7KΩ	1/4W	±5%		ELR-25J-472
R13	Carbon film	470KΩ	1/4W	±5%		ELR-25J-474
R14	Carbon film	4.7KΩ	1/4W	±5%		ELR-25J-472
R15	Carbon film	470KΩ	1/4W	±5%		ELR-25J-474
R16	Carbon film	4.7KΩ	1/4W	±5%		ELR-25J-472
R17	Carbon film	470KΩ	1/4W	±5%		ELR-25J-474
R18	Carbon film	4.7KΩ	1/4W	±5%		ELR-25J-472
R19	Carbon film	470KΩ	1/4W	±5%		ELR-25J-474
R20	Carbon film	4.7KΩ	1/4W	±5%		ELR-25J-472
R21	Carbon film	470KΩ	1/4W	±5%		ELR-25J-474
R22	Carbon film	100Ω	1/4W	±5%		ELR-25J-101
R23, 24	Carbon film	47KΩ	1/4W	±5%		ELR-25J-473
	SEMICONDUCTORS					
Q1–9	Transistor	silicon	Toshiba		2SC372(O)	2SC372(O)
D1, 2	Diode	silicon			HV-80	HV-80

Ref. No.	Description	RS Parts Number	MFR's Parts Number
	COILS/TRANSFORMERS/FILTERS/CRYSTALS		
T1	IFT coil	CA-2996	7MC-452503N
T2	Discriminator coil	CA-2997	7MC-2091N
CF-1	Filter 10.7 MHz	CA-3221	10.7MF-B
CF-2	Filter 455 kHz	C-0577	LF-C25
	Crystal 10.245 MHz	CX-0049	
	MISCELLANEOUS		
	P.C. Board UL listed	Y-4802	GE-18C-4425

OSC. P.C. BOARD PARTS LIST

Ref. No.	Description				RS Parts Number	MFR's Parts Number
			CAPACITORS			
C1, 2	Ceramic	0.0047μF		±10%		SCP-100
C3	Ceramic	5pF		±0.5PF		FC-50
C4	Ceramic	0.0047μF		±10%		SCP-100
C5	Ceramic	47pF		±5%		FCC-100
C6	Ceramic	100pF		±10%		FC-70
C7	Ceramic	39pF		±10%		FC-80
C8	Ceramic	0.0047μF		±10%		SCP-100
C9	Ceramic	47pF		±5%		FCC-100
C10	Ceramic	100pF		±10%		FC-70
C11	Ceramic	0.0047μF		±10%		SCP-100
C12	Ceramic	10pF		±0.5PF		FC-50
C13	Ceramic	0.0047μF		±10%		SCP-100
C14	Ceramic	33pF		±5%		FCC-80
C15	Ceramic	100pF		±10%		FC-70
C16	Ceramic	150pF		±10%		FCC-135
C17	Ceramic	0.0047μF		±10%		SCP-100
C18	Ceramic	0.01μF		−20 +80%		MC-70
C19	Ceramic	0.0047μF		±10%		SCP-100
C20	Ceramic	3pF		±0.25PF		FC-50
C21	Ceramic	33pF		±5%		FCC-80
C22	Ceramic	100pF		±10%		FC-70
C23	Ceramic	3pF		±0.25PF		FC-50
C24	Ceramic	150pF		±10%		FCC-135
C25	Ceramic	0.0047μF		±10%		SCP-100
C26—41	Ceramic	0.001μF		±10%		SCP-60
C42	Ceramic	2pF		±0.25PF		FC-50
C43	Ceramic	1pF		±0.25PF		FC-50
C44, 45	Ceramic	0.001μF		±10%		SCP-60
C46	Ceramic	0.002μF		±10%		SCP-80
C47	Electrolytic	1μF/50WV		−10 +75%		CE04W1H010
C48, 49	Ceramic	0.002μF		±10%		SCP-80
C50	Electrolytic	1μF/50WV		−10 +75%		CE04W1H010
C51	Ceramic	470pF		±10%		SCP-50
C52	Ceramic	100pF		±10%		FC-70
C53	Electrolytic	47μF/16WV		−10 +50%		CE04W1C470B
C54	Mylar	0.01μF		±20%		
C55	Not used					
C56	Electrolytic	1μF/50WV		−10 +50%		CE04W1H010
			RESISTORS			
R1	Carbon film	47Ω	1/4W	±5%		ERD-14VJ-470
R2, 3	Carbon film	1KΩ	1/4W	±5%		ERD-14VJ-102
R4	Carbon film	4.7KΩ	1/4W	±5%		ERD-14VJ-472
R5	Carbon film	10KΩ	1/4W	±5%		ERD-14VJ-103
R6	Carbon film	1KΩ	1/4W	±5%		ERD-14VJ-102
R7	Carbon film	4.7KΩ	1/4W	±5%		ERD-14VJ-472
R8	Carbon film	100Ω	1/4W	±5%		ERD-14VJ-101
R9	Carbon film	39KΩ	1/4W	±5%		ERD-14VJ-393
R10	Carbon film	10KΩ	1/4W	±5%		ERD-14VJ-103

Ref. No.	Description				RS Parts Number	MFR's Parts Number
R11	Carbon film	220Ω	1/4W	±5%		ERD-14VJ-221
R12	Carbon film	47Ω	1/4W	±5%		ERD-14VJ-470
R13	Carbon film	39KΩ	1/4W	±5%		ERD-14VJ-393
R14	Carbon film	10KΩ	1/4W	±5%		ERD-14VJ-103
R15	Carbon film	470Ω	1/4W	±5%		ERD-14VJ-471
R16	Carbon film	39KΩ	1/4W	±5%		ERD-14VJ-393
R17	Carbon film	10KΩ	1/4W	±5%		ERD-14VJ-103
R18	Carbon film	47Ω	1/4W	±5%		ERD-14VJ-470
R19	Carbon film	6.8KΩ	1/4W	±5%		ERD-14VJ-682
R20	Carbon film	100KΩ	1/4W	±5%		ERD-14VJ-104
R21	Carbon film	39KΩ	1/4W	±5%		ERD-14VJ-393
R22	Carbon film	10KΩ	1/4W	±5%		ERD-14VJ-103
R23	Carbon film	100KΩ	1/4W	±5%		ERD-14VJ-104
R24	Carbon film	10KΩ	1/4W	±5%		ERD-14VJ-103
R25	Carbon film	39KΩ	1/4W	±5%		ERD-14VJ-393
R26–41	Carbon film	1KΩ	1/4W	±5%		ERD-14VJ-102
R42	Carbon film	100Ω	1/4W	±5%		ERD-14VJ-101
R43	Carbon film	1.8KΩ	1/4W	±5%		ERD-14VJ-182
R44, 45	Carbon film	10KΩ	1/4W	±5%		ERD-14VJ-103
R46	Carbon film	1MΩ	1/4W	±5%		ERD-14VJ-105
R47	Carbon film	3.3KΩ	1/4W	±5%		ERD-14VJ-332
R48	Carbon film	330Ω	1/4W	±5%		ERD-14VJ-331
R49	Carbon film	470Ω	1/4W	±5%		ERD-14VJ-471
R50	Carbon film	10KΩ	1/4W	±5%		ERD-14VJ-103
R51	Carbon film	27KΩ	1/4W	±5%		ERD-14VJ-273
R52	Carbon film	470Ω	1/4W	±5%		ERD-14VJ-471
R53	Carbon film	100KΩ	1/4W	±5%		ERD-14VJ-104
R54, 55	Carbon film	10KΩ	1/4W	±5%		ERD-14VJ-103
SEMICONDUCTORS						
Q1–3	Transistor	silicon	Toshiba		2SA495(O)	2SA495(O)
Q4	Transistor	silicon	Toshiba		2SC373	2SC373
Q5	Transistor	silicon	Hitachi		2SC684(B)	2SC684(B)
Q6–9	Transistor	silicon	Toshiba		2SC394(Y)	2SC394(Y)
Q10	Transistor	silicon	Toshiba		2SC387(A)	2SC387(A)
Q11–13	Transistor	silicon	Toshiba		2SC373	2SC373
D1, 2	Diode	variable capacitor			MX-1	MX-1
D3–50	Diode	silicon			HV-80	HV-80
D51, 52	Diode	germanium			1N60	1N60
D53, 54	Diode	silicon			HV-80	HV-80
COILS/TRANSFORMERS/FILTERS						
T1	Coil				CA-4305	M-20009
T2	Coil				CA-6827	M-20000
T3	Coil				CA-4305	M-20009
T4	Coil				CA-3211	6.5SN0-086
T5	Coil				CA-2998	CAN-1979A
L1	Microinductor	0.68μH			CB-2190	EL0606-R68M
L2	Microinductor	1.8μH				LF-1R8K
L3	Microinductor	0.68μH			CB-2190	EL0606-R68M

Ref. No.	Description		RS Parts Number	MFR's Parts Number
L4	Microinductor	1.8μH		LF-1R8K
L5	Microinductor	0.68μH	CB-2190	EL0606-R68M
L6	Microinductor	1.8μH		LF-1R8K
L7	Microinductor	0.68μH	CB-2190	EL0606-R68M
L8	Microinductor	1.8μH		LF4-1R8K
L9	Microinductor	2mH	CB-2104	EL061-202K
CF-1	Ceramic filter	455 kHz	C-0578	BFB-455L
	SWITCHES			
S1–16	Slide switch	Band selector	S-2246	S-1-2-3
S17–32	Push switch	Channel selector	S-7195	9F-0001DF2010
S33	Manual switch		S-7194	2F-003CF2010
S34	Delay switch		S-7195	9F-0001DF2010
S35	AUTO switch		S-7194	2F-003CF2010
	MISCELLANEOUS			
	P.C. Board		X-4808	GE-19B-4508
	Pin terminal		HB-1507	59BS1574
	Crystal socket		J-6006	S2-101P
PL9～16	Pilot lamp	14V/50mA L=60m/m	L-0536	

RF/AF P.C. BOARD PARTS LIST

Ref. No.	Description			RS Parts Number	MFR's Parts Number
		CAPACITORS			
C1	Ceramic	62pF	±10%		FC-60
C2	Ceramic	8pF	±0.5PF		FC-50
C3	Ceramic	62pF	±10%		FC-60
C4	Ceramic	0.001μF	±10%		SCP-60
C5, 6	Ceramic	0.0047μF	±10%		SCP-100
C7	Ceramic	100pF	±10%		FC-70
C8	Ceramic	0.0047μF	±10%		SCP-100
C9	Ceramic	62pF	±10%		FC-60
C10	Ceramic	2pF	±0.25PF		FC-50
C11	Ceramic	0.001μF	±10%		SCP-60
C12	Ceramic	0.0047μF	±10%		SCP-100
C13	Ceramic	8pF	±0.5PF		FC-50
C14	Ceramic	0.5pF	±0.25PF		AK-50
C15	Ceramic	8pF	±0.5PF		FC-50
C16	Ceramic	0.001μF	±10%		SCP-60
C17, 18	Ceramic	0.0047μF	±10%		SCP-100
C19	Ceramic	0.001μF	±10%		SCP-60
C20	Ceramic	0.0047μF	±10%		SCP-100
C21	Ceramic	3pF	±0.25PF		FC-50
C22	Ceramic	2pF	±0.25PF		FC-50
C23	Ceramic	0.001μF	±10%		SCP-60
C24	Ceramic	2pF	±0.25PF		FC-50
C25, 26	Ceramic	0.0047μF	±10%		SCP-100
C27, 28	Ceramic	0.001μF	±10%		SCP-60
C29	Ceramic	0.0047μF	±10%		SCP-100
C30	Ceramic	47pF	±10%		FCC-80
C31	Ceramic	150pF	±10%		FCC-135
C32	Ceramic	0.0047μF	±10%		SCP-100
C33	Ceramic	470pF	±10%		SCP-50
C34	Mylar	0.01μF	±20%		
C35	Ceramic	0.01μF	−20 +80%		MC-70
C36, 37	Ceramic	0.1μF	−20 +80%		MC-135
C38	Mylar	0.01μF	±20%		
C39	Ceramic	33pF	±10%		FC-50
C40	Electrolytic	47μF/16WV	−10 +50%		CE04W1C470
C41	Electrolytic	1μF/50WV	±10%		CE04W1H010
C42	Mylar	0.01μF	±20%		
C43	Mylar	0.0047μF	±20%		
C44	Electrolytic	47μF/16WV	−10 +50%		CE04W1C470B
C45	Electrolytic	220μF/16WV	−10 +50%		CE04W1C221E
C46	Mylar	0.001μF	±20%		
C47	Electrolytic	10μF/16WV	−10 +50%		CE04W1C100F
C48	Mylar	0.0015μF	±20%		
C49	Electrolytic	100μF/16WV	−10 +50%		CE04W1C101F
C50, 51	Ceramic	0.1μF	−20 +80%		MC-135
C52, 53	Electrolytic	220μF/16WV	−10 +50%		CE04W1C221E
C54	Ceramic	0.1μF	−20 +80%		MC-135
C55–57	Electrolytic	220μF/25WV	−10 +50%		CE04W1E221C
C58	Electrolytic	1000μF/25WV	−10 +50%		CE02W1E102F
C59, 60	Ceramic	0.01μF	−20 +80%		MC-70

Ref. No.	Description				RS Parts Number	MFR's Parts Number
C61	Mylar	0.047μF		±20%		
		RESISTORS				
R1	Carbon film	68KΩ	1/4W	±5%		ERD-14VJ-683
R2	Carbon film	330Ω	1/4W	±5%		ERD-14VJ-331
R3	Carbon film	4.7KΩ	1/4W	±5%		ERD-14VJ-472
R4	Carbon film	10KΩ	1/4W	±5%		ERD-14VJ-103
R5	Carbon film	220Ω	1/4W	±5%		ERD-14VJ-221
R6	Carbon film	1KΩ	1/4W	±5%		ERD-14VJ-102
R7	Carbon film	100Ω	1/4W	±5%		ERD-14VJ-101
R8	Carbon film	47KΩ	1/4W	±5%		ERD-14VJ-473
R9	Carbon film	2.2KΩ	1/4W	±5%		ERD-14VJ-222
R10	Carbon film	100Ω	1/4W	±5%		ERD-14VJ-101
R11	Carbon film	68KΩ	1/4W	±5%		ERD-14VJ-683
R12	Carbon film	330Ω	1/4W	±5%		ERD-14VJ-331
R13	Carbon film	4.7KΩ	1/4W	±5%		ERD-14VJ-472
R14	Carbon film	10KΩ	1/4W	±5%		ERD-14VJ-103
R15	Carbon film	220Ω	1/4W	±5%		ERD-14VJ-221
R16	Carbon film	3.3KΩ	1/4W	±5%		ERD-14VJ-332
R17	Carbon film	100Ω	1/4W	±5%		ERD-14VJ-101
R18	Carbon film	47KΩ	1/4W	±5%		ERD-14VJ-473
R19	Carbon film	2.2KΩ	1/4W	±5%		ERD-14VJ-222
R20	Carbon film	100Ω	1/4W	±5%		ERD-14VJ-101
R21	Carbon film	470Ω	1/4W	±5%		ERD-14VJ-471
R22	Carbon film	10KΩ	1/4W	±5%		ERD-14VJ-103
R23	Carbon film	47KΩ	1/4W	±5%		ERD-14VJ-473
R24	Carbon film	330Ω	1/4W	±5%		ERD-14VJ-331
R25, 26	Carbon film	10KΩ	1/4W	±5%		ERD-14VJ-103
R27	Carbon film	100Ω	1/4W	±5%		ERD-14VJ-101
R28	Carbon film	39KΩ	1/4W	±5%		ERD-14VJ-393
R29	Carbon film	10KΩ	1/4W	±5%		ERD-14VJ-103
R30	Carbon film	470Ω	1/4W	±5%		ERD-14VJ-471
R31	Carbon film	10KΩ	1/4W	±5%		ERD-14VJ-103
R32	Carbon film	1KΩ	1/4W	±5%		ERD-14VJ-102
R33	Carbon film	6.8KΩ	1/4W	±5%		ERD-14VJ-682
R34	Carbon film	1MΩ	1/4W	±5%		ERD-14VJ-105
R35	Carbon film	4.7KΩ	1/4W	±5%		ERD-14VJ-472
R36	Carbon film	470Ω	1/4W	±5%		ERD-14VJ-471
R37	Carbon film	2.2MΩ	1/4W	±5%		ERD-14VJ-225
R38	Carbon film	1MΩ	1/4W	±5%		ERD-14VJ-105
R39	Carbon film	1.5KΩ	1/4W	±5%		ERD-14VJ-152
R40	Carbon film	1KΩ	1/4W	±5%		ERD-14VJ-102
R41	Carbon film	10KΩ	1/4W	±5%		ERD-14VJ-103
R42	Carbon film	5.6KΩ	1/4W	±5%		ERD-14VJ-562
R43	Carbon film	100Ω	1/4W	±5%		ERD-14VJ-101
R44	Carbon film	3.9KΩ	1/4W	±5%		ERD-14VJ-392
R45	Carbon film	22Ω	1/4W	±5%		ERD-14VJ-220
R46	Carbon film	390Ω	1/4W	±5%		ERD-14VJ-391
R47, 48	Metal film	1Ω	1W	±10%		RN1B
R49	Carbon film	150Ω	1/4W	±5%		ERD-14VJ-151
R50	Carbon film	47Ω	1/2W	±5%		ERD-12VJ-470

Ref. No.	Description			RS Parts Number	MFR's Parts Number
	VARIABLE RESISTORS				
VR1	Semi Fixed Resistor, 500Ω				TR12R 500Ω(B)
	SEMICONDUCTORS				
Q1, 2	Transistor	silicon	Hitachi	2SC535(B)	2SC535(B)
Q3	FET	silicon	Toshiba	2SK19(Y)	2SK19(Y)
Q4, 5	Transistor	silicon	Hitachi	2SC535(B)	2SC535(B)
Q6	FET	silicon	Toshiba	2SK19(Y)	2SK19(Y)
Q7, 8	Transistor	silicon	Toshiba	2SC372(O)	2SC372(O)
Q9	Transistor	silicon	Toshiba	2SC394(Y)	2SC394(Y)
Q10	FET	silicon	Toshiba	2SK30A(O)	2SK30A(O)
Q11, 12	Transistor	silicon	Toshiba	2SC373	2SC373
Q13	Transistor	silicon	Toshiba	2SC789(O)	2SC789(O)
Q14	Transistor	silicon	Toshiba	2SC1173(O)	2SC1173(O)
D1, 2	Diode	silicon		HV-80	HV-80
D3	Diode	Zener		02Z10A	02Z10A
D4–8	Diode	silicon		1S1885	1S1885
IC1	Integrated circuit			BA501	BA501
	COILS/TRANSFORMERS/FILTERS/CRYSTAL				
T1	Coil			CA-7173	M-7332
T2	Coil			CA-3174	M-7343
T3	Coil			CA-6827	M-20000
T4–6	Coil			CA-2511	M-7230
T7	Coil			CA-7150	R12 3155(B)
T8	Coil			CA-7246	119LC470033N3
L1	Microinductor	0.68uH		CB-2190	EL0606-R68M
L2	Choke coil			CA-3182	3B-037
CF-1	Ceramic filter	455 kHz		C-0578	BFB-455L
X1	Crystal	54.7 MHz		CX-0050	
	MISCELLANEOUS				
	P.C. Board		UL listed	X-4809	GE-19B-4504
	Pin terminal			HB-1507	59BS-1574
	RF shield plate			HB-1639	GE-19D-4556
	Transistor insulator				
	Nylon screw	3 x 6			
	Nut	3m/m			
	Test pin			HB-1640	
	Wire		UL listed		AWG-26

LOGIC P.C. BOARD PARTS LIST

Ref. No.	Description				RS Parts Number	MFR's Parts Number
	CAPACITORS					
C1	Mylar	0.047μF		±20%		
C2	Tantalum	1μF/25WV		±20%		CS15E1E010M
C3	Tantalum	2.2μF/25WV		±20%		CS15E1E2R2M
C4	Electrolytic	220μF/16WV		−10 +50%		CE04W1C221E
C5	Electrolytic	1000μF/10WV		−10 +50%		CE04W1A103B
C6	Tantalum	1μF/25WV		±20%		CS15E1E010M
C7	Electrolytic	1000μF/10WV		−10 +50%		CE04W1A103B
C8	Mylar	0.047μF		±20%		
C9	Electrolytic	47μF/16WV		−10 +50%		CE04W1C470B
C10, 11	Tantalum	4.7μF/25WV		−10 +75%		CS15E1E4R7M
C12	Electrolytic	47μF/16WV		−10 +50%		CE04W1C470B
C13	Electrolytic	220μF/16WV		−10 +50%		CE04W1C221E
	RESISTORS					
R1	Carbon film	10KΩ	1/8W	±5%		ERD-18TJ-103
R2	Carbon film	4.7KΩ	1/8W	±5%		ERD-18TJ-472
R3, 4	Carbon film	47KΩ	1/8W	±5%		ERD-18TJ-473
R5	Carbon film	4.7KΩ	1/8W	±5%		ERD-18TJ-472
R6	Carbon film	33KΩ	1/8W	±5%		ERD-18TJ-333
R7	Carbon film	470Ω	1/8W	±5%		ERD-18TJ-471
R8	Carbon film	3.3KΩ	1/8W	±5%		ERD-18TJ-332
R9, 10	Carbon film	10KΩ	1/8W	±5%		ERD-18TJ-103
R11	Carbon film	47KΩ	1/8W	±5%		ERD-18TJ-473
R12	Carbon film	10KΩ	1/8W	±5%		ERD-18TJ-103
R13	Carbon film	47KΩ	1/8W	±5%		ERD-18TJ-473
R14	Metal film	33Ω	3W	±10%		M0-4
R15	Carbon film	1.5KΩ	1/8W	±5%		ERD-18TJ-152
R16	Carbon film	3.3KΩ	1/8W	±5%		ERD-18TJ-332
R17	Carbon film	47Ω	1/8W	±5%		ERD-18TJ-470
R18	Carbon film	3.3KΩ	1/8W	±5%		ERD-18TJ-332
R19	Carbon film	470KΩ	1/8W	±5%		ERD-18TJ-474
R20	Carbon film	120KΩ	1/8W	±5%		ERD-18TJ-124
R21	Carbon film	3.3KΩ	1/8W	±5%		ERD-18TJ-332
R22	Carbon film	10KΩ	1/8W	±5%		ERD-18TJ-103
R23	Carbon film	3.3KΩ	1/8W	±5%		ERD-18TJ-332
R24	Carbon film	47KΩ	1/8W	±5%		ERD-18TJ-473
R25	Carbon film	560Ω	1/8W	±5%		ERD-18TJ-561
	SWITCHES					
S36	Priority switch				S-7196	8F-0002DF2010
	SEMICONDUCTORS					
Q1−12	Transistor	Silicon	Toshiba		2SC373	2SC373

Ref. No.	Description		RS Parts Number	MFR's Parts Number
D1, 2	Diode	Silicon	HV-80	HV-80
D3–5	Diode	Germanium	1N60	1N60
D6	Diode	Silicon	HV-80	HV-80
D7	Diode	Germanium	1N60	1N60
IC1, 2	Integrated circuit		N74145N	N74145N
IC3	Integrated circuit		N7402	N7402
IC4	Integrated circuit		N7493	N7493
IC5	Integrated circuit		N7400A	N7400A
	MISCELLANEOUS			
PL1–8	Pilot lamp	L=60mm	L-0536	14V/50mA
	10 pin connector		J-4374	AD-702B-00P
	Logic shield plate		HB-1641	GE-19D-4552
	Fiber for logic		HB-1642	GE-19D-4551
	P.C. Board	UL listed	X-4810	GE-19B-4512

CHASSIS ASSEMBLY PARTS LIST

Ref. No.	Description	RS Parts Number	MFR's Parts Number
	RESISTORS		
R1	Carbon film 1.8MΩ 1/2W ±5%		ERD-12TJ-185
	POTENTIOMETERS		
VR2	Potentiometer, VOLUME	P-1472	VM10A-50KB
VR3	Potentiometer, SQUELCH	P-1471	VM11A-5M1111-50KA
VR4	Potentiometer, SCAN RATE	P-0756	VM10A-100KC
PT1	Power transformer	TA-0448	K0869
	MISCELLANEOUS		
	1P RCA jack	J-0248	GE-15D-2066
	Phone jack	J-0030	SG-7615
	3P DC jack	J-0211	#1476
	AC cord 6 feet BLK UL listed		
	Line cord strain relief UL listed	W-1392	SR-3P-4
	Cord band	HB-1649	NO. 5121
	Speaker	S-4529	EP-100715ST
	DC cable (with fuse holder) UL listed		GE-19D-4457
	Lug terminal UL listed	J-4326	95KU4802
	Fiber for AC UL listed		GE-19D-4557
	Fiber for handle	HB-0434	GE-16D-2862
	Foot UL listed	F-0065	NO. 7101
	Knob spacer		HN611
	Motorola jack	J-0566	JA-C-020
	AMP terminal UL listed	HB-1650	
	Front escutcheon UL listed	Z-2149	GE-19B-4545
	Front panel	Z-2150	GE-19C-4546
	Volume knob UL listed	K-1027	GE-16D-3007
	Push switch knob UL listed	K-1709	GE-19C-4548A
	Lamp holder UL listed	HB-1651	GE-19D-4547
	Push knob		GE-19D-4549
	Chassis		GE-19A-4541
	Cabinet		GE-19B-4542
	Crystal cover	DA-0125	GE-19C-4543
	Antenna supporter	HB-0428	GE013C-890
	Mounting bracket	MB-0109	GE-19C-4544
	Mounting bracket screw	HS-0379	GE-16D-3166
	Cloth for speaker UL listed	HB-1653	GE-19D-4554
	Styrofoam pad for crystal UL listed	HB-1654	GE-19D-4553

SEMICONDUCTOR LEAD IDENTIFICATION

(A): 2SA495 (O), 2SC371 (O), 2SC372 (O), 2SC373, 2SC387A, 2SC394 (Y)
(B): 2SK19 (Y)
(C): 2SC789 (O), 2SC1173
(D): 2SC535 (B), 2SC684
(E): 2SC787 (BL), 2SC1117
(F): 2SK30A (O)

(A)
(B)

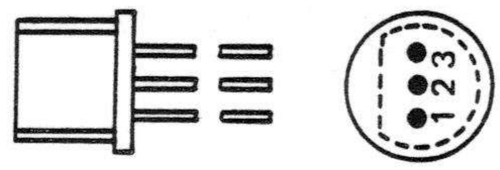

(A)
1. Emitter
2. Collector
3. Base

(B)
1. Drain
2. Source
3. Gate

(C)

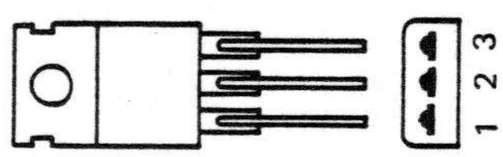

(C)
1. Base
2. Collector (Heat Sink)
3. Emitter

(D)

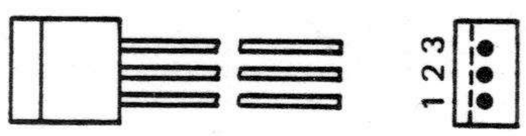

(D)
1. Emitter
2. Collector
3. Base

(E)

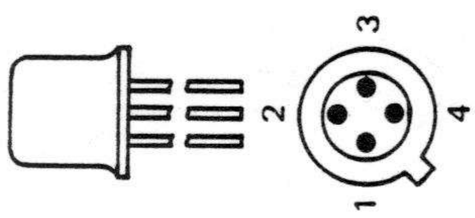

(E)
1. Emitter
2. Base
3. Collector
4. Case

(F)

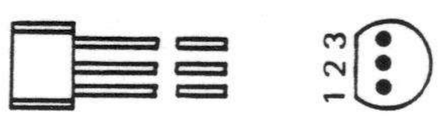

(F)
1. Source
2. Gate
3. Drain

SCHEMATIC DIAGRAM

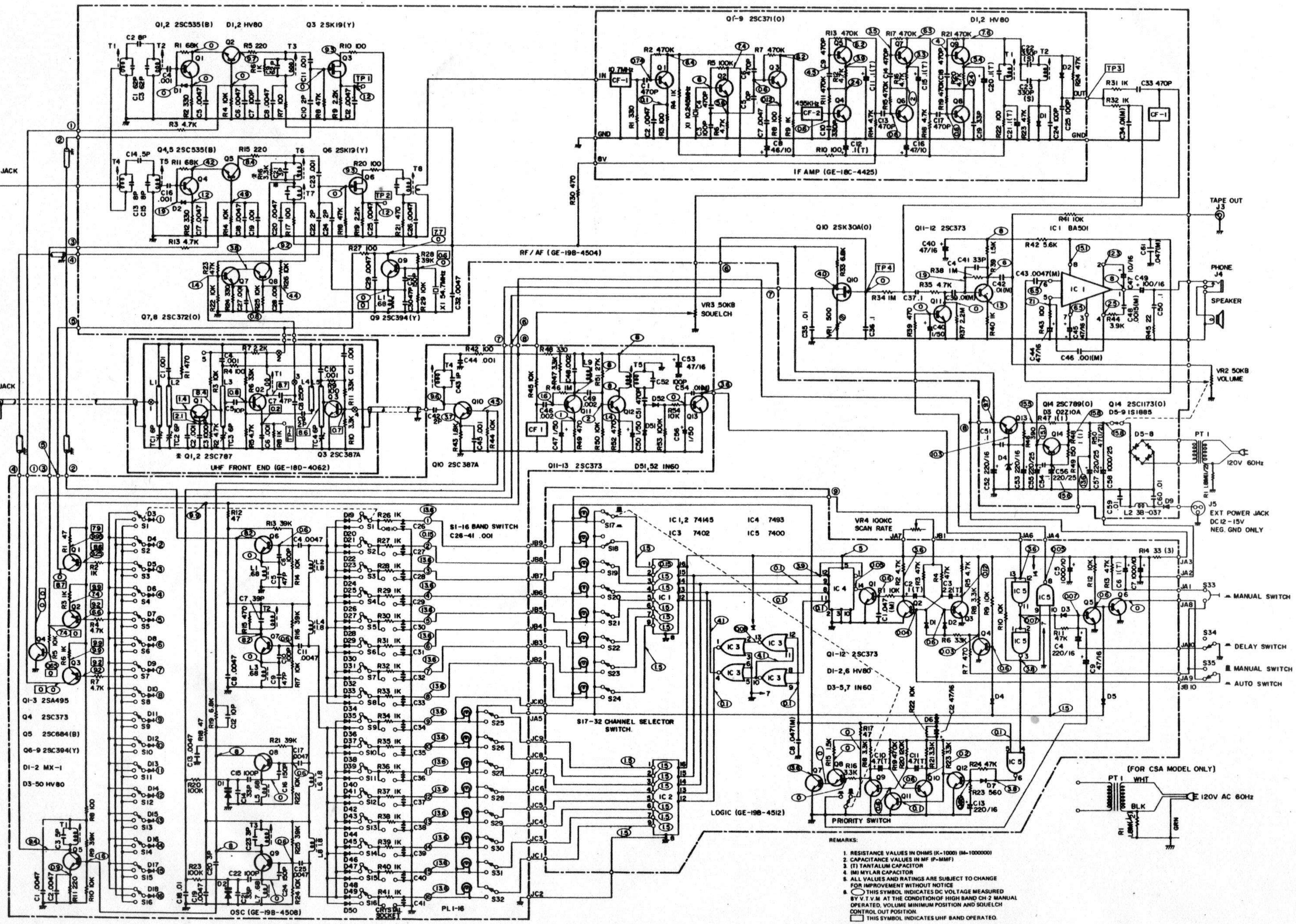

REMARKS:

1. RESISTANCE VALUES IN OHMS (K=1000) (M=1000000)
2. CAPACITANCE VALUES IN MF (P=MMF)
3. (T) TANTALUM CAPACITOR
4. (M) MYLAR CAPACITOR
5. ALL VALUES AND RATINGS ARE SUBJECT TO CHANGE FOR IMPROVEMENT WITHOUT NOTICE
6. ◯ THIS SYMBOL INDICATES DC VOLTAGE MEASURED BY V.T.V.M. AT THE CONDITION OF HIGH BAND CH-2 MANUAL OPERATED, VOLUME MINIMUM POSITION AND SQUELCH CONTROL OUT POSITION.
   ▭ THIS SYMBOL INDICATES UHF BAND OPERATED.